Rizzetta & Company

CFM
Community Development District

Board of Supervisors' Meeting
April 18, 2019

District Office:
9530 Marketplace Road, Suite 206
Fort Myers, Florida 33912
(239) 936-0913

www.cfmcdd.org

CFM
COMMUNITY DEVELOPMENT DISTRICT

Rizzetta & Company, Inc., 9530 Marketplace Road, Suite 206, Fort Myers, Florida 33912

Board of Supervisors	Leah Popelka	Chairman
	Scott Campbell	Vice Chairman
	Paul Mayotte	Assistant Secretary
	Bob Bishop	Assistant Secretary
	Chip Jones	Assistant Secretary
District Manager	Belinda Blandon	Rizzetta & Company, Inc.
District Counsel	Michael Eckert	Hopping Green & Sams, P.A.
District Engineer	David Robson	Johnson Engineering, Inc.

All cellular phones must be placed on mute while in the meeting room.

The Audience Comment portion of the agenda is where individuals may make comments on matters that concern the District. Individuals are limited to a total of three (3) minutes to make comments during this time.

Pursuant to provisions of the Americans with Disabilities Act, any person requiring special accommodations to participate in this meeting/hearing/workshop is asked to advise the District Office at least forty-eight (48) hours before the meeting/hearing/workshop by contacting the District Manager at (239) 936-0913. If you are hearing or speech impaired, please contact the Florida Relay Service by dialing 7-1-1, or 1-800-955-8771 (TTY) 1-800-955-8770 (Voice), who can aid you in contacting the District Office.

A person who decides to appeal any decision made at the meeting/hearing/workshop with respect to any matter considered at the meeting/hearing/workshop is advised that person will need a record of the proceedings and that accordingly, the person may need to ensure that a verbatim record of the proceedings is made including the testimony and evidence upon which the appeal is to be based.

CFM COMMUNITY DEVELOPMENT DISTRICT
DISTRICT OFFICE • 9530 MARKETPLACE ROAD • SUITE 206 • FORT MYERS • FLORIDA • 33912
www.cfmcdd.org

April 11, 2018

Board of Supervisors
CFM Community
Development District

AGENDA

Dear Board Members:

The regular meeting of the Board of Supervisors of the CFM Community Development District will be held on **Thursday, April 18, 2019 at 11:30 a.m.,** at the office of Rizzetta & Company, Inc., 9530 Marketplace Road, Suite 206, Fort Myers, Florida 33912. The following is the agenda for the meeting:

1. CALL TO ORDER/ROLL CALL
2. PUBLIC COMMENT
3. BUSINESS ADMINISTRATION
- A. Consideration of the Minutes of the Board of Supervisors' Meeting held on February 21, 2019 ..... Tab 1
- B. Consideration of the Operations and Maintenance Expenditures for the Months of January and February 2019 .. Tab 2

4. BUSINESS ITEMS
- A. Consideration of Resumes from Resident Board Candidates (Under Separate Cover)
- B. Discussion Regarding Reimbursement of Roadway Repairs
- C. Consideration of Suntech Electrical Lighting Proposals..... Tab 3
- D. Consideration of Solitude Lake Management Contract Renewal Tab 4
- E. Consideration of Audit for Fiscal Year End September 30, 2018 Tab 5
- F. Consideration of Hopping Green & Sams Fee Increase Letter Tab 6
- G. Consideration of Matters Pertaining to Conservation Property (Under Separate Cover)

5. STAFF REPORTS
- A. District Counsel
- B. District Engineer
- C. District Manager

6. SUPERVISOR REQUESTS AND COMMENTS
7. ADJOURNMENT

We look forward to seeing you at the meeting. In the meantime, if you have any questions, please do not hesitate to call us at (239) 936-0913.

Very truly yours,

Belinda Blandon

Belinda Blandon
District Manager

cc: Mike Eckert, Hopping Green & Sams, P.A.

Tab 1

MINUTES OF MEETING

Each person who decides to appeal any decision made by the Board with respect to any matter considered at the meeting is advised that the person may need to ensure that a verbatim record of the proceedings is made, including the testimony and evidence upon which such appeal is to be based.

CFM COMMUNITY DEVELOPMENT DISTRICT

The regular meeting of the Board of Supervisors of the CFM Community Development District was held on **Thursday, February 21, 2019 at 11:30 a.m.** at the office of Rizzetta & Company, Inc., located at 9530 Marketplace Road, Suite 206, Fort Myers, FL 33912.

Present and constituting a quorum:

Leah Popelka	**Board Supervisor, Chairperson**
Scott Campbell	**Board Supervisor, Vice Chairman**
Paul Mayotte	**Board Supervisor, Assistant Secretary**
Chip Jones, Jr.	**Board Supervisor, Assistant Secretary**

Also present were:

Belinda Blandon	**District Manager, Rizzetta & Company, Inc.**
Mike Eckert	**District Counsel, Hopping Green & Sams, P.A.**
David Robson	**District Engineer, Johnson Engineering**
Brent Burford	**District Engineer, Johnson Engineering**
Audience	

FIRST ORDER OF BUSINESS **Call to Order**

Ms. Blandon called the meeting to order and read the roll call.

SECOND ORDER OF BUSINESS **Public Comment**

Ms. Blandon opened the floor for public comment.

Mr. Streeter inquired regarding pressure washing of the sidewalks on Magnolia Landing Lane. Ms. Blandon advised that she will inquire with the vendor. He also inquired regarding the new lights that are being proposed for installation regarding whether or not they will have outlets as the base. Ms. Blandon advised they will not.

THIRD ORDER OF BUSINESS **Consideration of the Minutes of the Board of Supervisors' Meeting held on December 20, 2018**

Ms. Blandon presented the Minutes of the Board of Supervisors' meeting held on December 20, 2018. She asked if there were any questions related to the minutes. Corrections to the minutes were noted.

DRAFT

> On a Motion by Ms. Popelka, seconded by Mr. Jones, Jr., with all in favor, the Board Approved the Minutes of the Board of Supervisors' Meeting held on December 20, 2018, Subject to Corrections Noted on the Record, for the CFM Community Development District.

FOURTH ORDER OF BUSINESS **Consideration of the Operations and Maintenance Expenditures for the Month of December 2018**

Ms. Blandon provided an overview of the expenditures paid for the period of December 1-31, 2018 which totaled $9,934.16 and asked if there were any questions related to any item of expenditure. Mr. Jones, Jr. inquired as to the aerator invoices. Ms. Blandon confirmed the agreement is a flat fee agreement.

> On a Motion by Mr. Jones, Jr., seconded by Mr. Mayotte, with all in favor, the Board Approved the Operations and Maintenance Expenditures for the Month of December 2018, totaling $9,934.16, for the CFM Community Development District.

FIFTH ORDER OF BUSINESS **Consideration of Magnolia Landing Golf Proposals for Aerator Repairs and Landscaping**

Ms. Blandon advised that a proposal was received from Magnolia Landing Golf for aerator repairs, in the amount of $5,475.00, for items not covered in the maintenance agreement.

> On a Motion by Mr. Jones, Jr., seconded by Ms. Popelka, with all in favor, the Board Approved the Magnolia Landing Golf Proposal for Aerator Repairs, Subject to Review by District Counsel to Verify the Items are Not Covered Under the Current Maintenance Agreement, Not to Exceed $5,500.00, for the CFM Community Development District.

Ms. Blandon advised that a proposal was received from Magnolia Landing Golf for landscaping along Magnolia Landing Lane. She advised the proposal includes two options for plantings; the first is a recommendation in the amount of $14,580.00, and the second proposal is a reduced quantity proposal in the amount of $9,980.00. Discussion ensued. Ms. Blandon advised that she will ask Ms. Stahl for a proposal with options for different plant material.

SIXTH ORDER OF BUSINESS **Consideration of Proposals for Preserve Maintenance**

Ms. Blandon advised that proposals for Preserve Maintenance were received from EarthBalance, Earth Tech Environmental, Mettauer Environmental, Sandhill Environmental, Solitude Lake Management, and Woods and Wetlands. She further

DRAFT

advised that the budget amount for this item is $60,000.00 and the last semi-annual event occurred in October 2018.

Mr. Robson provided an overview of the proposals received. Discussion ensued.

> On a Motion by Ms. Popelka, seconded by Mr. Mayotte, with all in favor, the Board Approved the Earth Tech Environmental Proposal for Preserve Maintenance, Subject to Preparation of a Contract by District Counsel and Providing Authorization to the Chair for Execution of the Contract, for the CFM Community Development District.

SEVENTH ORDER OF BUSINESS **Consideration of LCEC Proposal for Entry Lighting**

Ms. Blandon advised that she obtained the proposal from LCEC for entry lighting per direction provided by Mr. Dady. She advised that LCEC is charging $6,800.00 for engineering costs and that the conduit will have to be installed by CFM CDD. Discussion ensued. Ms. Popelka suggested deferring this item until associated costs can be determined. The Board concurred.

EIGHTH ORDER OF BUSINESS **Discussion Regarding Resolution 2018-05, Declaring Board Vacancies**

Ms. Blandon advised that seats 3 and 4 were declared vacant as of November 20, 2018 and as per the resolution the incumbent Supervisors of those seats shall remain in office until a replacement can be located. She advised that seat 2 is also a holdover from the 2016 election cycle. Mr. Eckert advised that seats 2, 3, and 4 should be filled by residents; although sometimes residents do not show interest or cannot fill the seats due to not being permanent residents of the District. Discussion ensued. Mr. Eckert advised that anyone who is interested in serving on the Board should contact Ms. Blandon at least ten days prior to the next Board of Supervisors' meeting; he further reviewed the requirements for residents to serve on the Board.

NINTH ORDER OF BUSINESS **Staff Reports**

A. District Counsel

Mr. Eckert advised that he has been working on questions related to the second lift of asphalt as discussed as previous meetings; he advised that his understanding is that the second lift had an eighteen month deadline from November 2, 2017 which means May of 2019 and it is his understanding that DR Horton is looking to do the second lift in April of 2019. Mr. Eckert advised that another issue was raised related to the agreement; he advised the agreement is a private agreement and the CDD is not a party of the agreement; but it does call for repairs and maintenance to be conducted by DR Horton prior to the final lift. Mr. Eckert is looking into getting reimbursement for past repairs as well as funding for future repairs.

DRAFT

Mr. Eckert advised that he is still working on the issue of the accounts receivable for the outstanding assessment but advised they should not be written off at this point.

Mr. Eckert provided an overview of legislation currently being proposed related to sovereign immunity limits which could affect the Districts insurance rates, lowering of retainage on contracts, auditing requirements, and public records as well as public meetings related to voting conflicts and a requirement to answer any questions asked by any person who attends a public meeting.

Mr. Jones, Jr. inquired regarding the website ADA concern. Mr. Eckert provided input relating to CDD websites. Discussion ensued. Mr. Eckert advised that he has been working closely with Rizzetta & Company on the ADA website compliance issue.

Mr. Mayotte discussed potholes that are in need of repair.

B. District Engineer
Mr. Robson advised that he had no report.

C. District Manager
Ms. Blandon advised the next meeting of the Board of Supervisors is scheduled for Thursday, March 21, 2019 at 11:30 a.m.

TENTH ORDER OF BUSINESS **Supervisor Requests**

Ms. Blandon opened the floor for Supervisor requests and comments. There were none.

ELEVENTH ORDER OF BUSINESS **Adjournment**

Ms. Blandon advised there is no further business to come before the Board and asked for a motion to adjourn.

On a Motion by Ms. Popelka, seconded by Mr. Jones, Jr., with all in favor, the Board adjourned the meeting at 12:19 p.m., for the CFM Community Development District.

_____ _____

Secretary/Assistant Secretary Chairman/Vice Chairman

DRAFT

Tab 2

CFM COMMUNITY DEVELOPMENT DISTRICT

DISTRICT OFFICE · 9530 MARKETPLACE ROAD · SUITE 206 · FT. MYERS, FLORIDA 33912

Operation and Maintenance Expenditures
January 2019
For Board Approval

Attached please find the check register listing the Operation and Maintenance expenditures paid from January 1, 2019 through January 31, 2019. This does not include expenditures previously approved by the Board.

The total items being presented: **$153,036.30**

Approval of Expenditures:

_____

_____ Chairperson

_____ Vice Chairperson

_____ Assistant Secretary

CFM Community Development District

Paid Operation & Maintenance Expenditures

January 1, 2019 Through January 31, 2019

Vendor Name	Check Number	Invoice Number	Invoice Description		Invoice Amount
Brad Cohan	002414	19019	Pressure Wash Sidewalks 1/19	$	4,757.17
Dale S. Jones Jr.	002406	DJ122018	Board of Supervisors Meeting 12/20/18	$	200.00
Earthbalance Inc.	002416	41970	Mitigation Maint & Planting 09/18	$	120,002.05
Hopping Green & Sams	002417	104440	General/Monthly Legal Services 11/18	$	2,846.50
Johnson Engineering Inc	002418	132	General Engineering Services 12/18 20044888-001	$	6,104.15
LCEC	002407	6571809552 12/18	Street Lights 3000 Magnolia Landing Ln 11/18	$	1,678.98
Leah Popelka	002410	LP122018	Board of Supervisors Meeting 12/20/18	$	200.00
Lee County Board of County Commissioners	002408	2138	Annual Regulatory Program & Surveillance Fee 2019	$	560.00
Lee County Tax Collector	002409	10-43-24-00-00003.0100 2018	2018 Non Ad Valorem Assessment Roll	$	6.35
Lee County Tax Collector	002409	Real Estate Tax 2018	2016/2017 Unpaid Real Estate Tax	$	431.60
Magnolia Landing Golf, LLC	002420	1099	Aerator Agreement & Water 01/19	$	625.00
Magnolia Landing Golf, LLC	002420	1100	Aerator Utility Cost 1/19	$	500.00
Magnolia Landing Golf, LLC	002420	1101	Removed 2 Dead Trees 1/19	$	170.00
Magnolia Landing Golf, LLC	002420	1103	Tree Removal Redstone 1/19	$	75.00
Magnolia Landing Master Association, Inc.	002419	347	Landscape Maintenance 11/18	$	3,494.58
Magnolia Landing Master Association, Inc.	002419	348	Landscape Maintenance 12/18	$	3,494.58
Rizzetta & Company, Inc.	002411	INV00000037477	District Management Fees 1/19	$	3,703.34
Rizzetta Technology Services, LLC	002412	INV0000004024	Website Hosting & Email Services 1/19	$	175.00
Robert Bishop	002404	BB122018	Board of Supervisors Meeting 12/20/18	$	200.00
Scott Campbell	002405	SC122018	Board of Supervisors Meeting 12/20/18	$	200.00
Solitude Lake Management LLC	002421	PI-A00217603	Monthly Lake & Pond Service 11/18	$	1,753.00
Solitude Lake Management LLC	002421	PI-A00230632	Monthly Lake & Pond Service 01/19	$	1,753.00

CFM Community Development District

Paid Operation & Maintenance Expenditures

January 1, 2019 Through January 31, 2019

Vendor Name	Check Number	Invoice Number	Invoice Description	Invoice Amount
The Daily Breeze	002413	112401- L03434 12/18	Legal Advertising 12/18	$ 53.00
The Daily Breeze	002415	129040-L03434	Legal Advertising 12/18	$ 53.00
Report Total				$ 153,036.30

Beth Donovan

From: Belinda Blandon
Sent: Wednesday, January 9, 2019 11:51 AM
To: Beth Donovan
Subject: FW: Pressure washing invoice

This is an invoice for CFM.

Belinda Blandon
District Manager

Rizzetta & Company
9530 Marketplace Road
Suite 206
Fort Myers, Florida 33912
Phone: 239-936-0913

bblandon@rizzetta.com

Rizzetta & Company
Professionals in Community Management

Electronic Mail Notice: Under Florida law, e-mail addresses are public records. If you do not want your e-mail address released in response to a public records request, do not send electronic mail to this entity. Instead, contact this office by phone or in writing.

This electronic message transmission and any attachments contain information from Rizzetta & Company, Inc. which may be confidential or privileged. The information is solely intended for the use of the individual or entity named above. If you are not the intended recipient, be aware that any disclosure, copying, distribution or use of the contents of this information is prohibited. If you have received this electronic transmission in error, please immediately notify us by return email or telephone at (813) 514-0400 and delete the original message. Under Florida law, certain written communications with the sender of this message may be subject to public records disclosure requirements. Please be aware of this possibility when including personal information in your communications. Unless specifically indicated, the contents of this electronic message and its related attachments (including forwarded messages) do not constitute a legal opinion on behalf of the sender and/or Rizzetta & Company, Inc. Recipients of this message, whether directly addressed or not, should not rely upon or otherwise construe this message as legal advice. The sender is not a licensed financial advisor or securities broker; any financial topics addressed herein are for informational purposes and do not constitute investing advice. Thank you.

From: Brad Cohan <bradspressurewashing@aol.com>
Sent: Wednesday, January 09, 2019 10:21 AM
To: Belinda Blandon <BBlandon@rizzetta.com>
Subject: Pressure washing invoice

RECEIVED
JAN 0 9 2019

Brad's Pressure Washing, Inc.

01-09-2019

Invoice # 19019

To- CFM Community Development District

Pressure wash the following sidewalks located in Magnolia Landing of Ft. Myers-

1) Magnolia Landing Dr--------$4,757.17

Total----------$4,757.17

Thank you,

Brad Cohan - President
Brad's Pressure Washing, Inc.
www.brads-pressure-washing.com
941-204-6085
239-292-7099

Please send check to-

Brad's Pressure washing, Inc.
5016 Abdella Ln
North Port, FL 34291

Date Rec'd Rizzetta & Co, Inc

D/M approval Belinda Blandon Date 1/11/19

Date entered JAN 10 2019

Fund 001 GL 54100 OC 4631

Check #

CFM CDD

Meeting Date: December 20, 2018

SUPERVISOR PAY REQUEST

RECEIVED
DEC 27 2018

Name of Board Supervisor	Check if present	Check if paid
Scott Campbell	✓	X
Adam Lerner		X
Paul Mayotte		X
Bob Bishop	✓	X
Leah Popelka	✓	X
Dale Jones, Jr.	✓	X

(*) Does not get paid

EXTENDED MEETING TIMECARD

Meeting Start Time:	11:34 am
Meeting End Time:	12:28 pm
Total Meeting Time:	54 mins

Time Over _____ () Hours:	

Total at $175 per Hour:	

DM Signature: _____

Date rec'd Rizzetta & Co., Inc. _____

D/M approval Belinda Blandon Date 1/2/19

Date entered DEC 27 2018

Fund 001 GL 51100 OC 1101

Check # _____

EarthBalance
2570 Commerce Parkway
North Port, FL 34289
Phone: (941) 426-7878
Fax: (941) 426-8778

EarthBalance®

PAST DUE

RE
NOV 2 0 2018

CFM Community Developmenmt District
9530 Marketplace Road
206
Fort Myers, FL 33912

September 21, 2018
Invoice No: 41970

Project Manager Zachary Schnoke

Project 15246.1 CFM CDD 2016 Mitigation

Professional Services for the Period: September 1, 2018 to September 30, 2018

Billing Group 001 Maintenance & Planting

The Initial Maintenance and Planting for the CFM CDD Mitigation project located in Lee County FL.

Billing Task	Task Fee	Percent Complete	Fee Earned	Prior Billing	Current Fee
Initial Exotic Maintenance	237,754.96	100.00	237,754.96	237,754.96	0.00
Planting	120,002.05	100.00	120,002.05	0.00	120,002.05
Total Fee	357,757.01		357,757.01	237,754.96	120,002.05
	Total Fee			**120,002.05**	
			Task Total	**$120,002.05**	
			Billing Group Total	**$120,002.05**	
			TOTAL AMOUNT DUE	**$120,002.05**	

Date rec'd Rizzetta & Co., Inc. _____
D/M approval Belinda Blandon Date 1/25/19
Date entered JAN 2 3 2019
Fund 001 GL 57900 OC 4798
Check # _____

Statement

EarthBalance®

2570 Commerce Parkway
North Port, FL 34289

October 31, 2018

CFM Community Developmenmt District
9530 Marketplace Road
206
Fort Myers, FL 33912

Current	
Past Due	120,002.05
Balance Due	120,002.05

Outstanding Invoices

Number	Date	Balance Due	Retainage
41970	9/21/2018	120,002.05	

Current	31 - 60 Days	61 - 90 Days	91 - 120 Days	121 - 150 Days	Over 150 Days
	120,002.05				

Hopping Green & Sams
Attorneys and Counselors

119 S. Monroe Street, Ste. 300
P.O. Box 6526
Tallahassee, FL 32314
850.222.7500

RECEIVED
JAN 0 8 2019

========== STATEMENT ==========

December 21, 2018

CFM Community Development District
c/o Rizzetta & Company
9530 Marketplace Road Suite # 206
Ft. Myers, FL 33912

Bill Number 104440
Billed through 11/30/2018

Date Rec'd Rizzetta & Co, Inc
D/M approval Belinda Blandon Date 1/11/19
Date entered JAN 0 9 2019
Fund 001 GL 51400 OC 3107
Check #

General Counsel/Monthly Meeting
CFMCDD 00001 MCE

FOR PROFESSIONAL SERVICES RENDERED

11/01/18	JEM	Review correspondence from Jones; prepare reply to same.	0.10 hrs
11/01/18	MKR	Prepare resolution amending fiscal year 2017-2018 budget.	0.30 hrs
11/02/18	MKR	Review tentative agenda for board meeting.	0.10 hrs
11/02/18	APA	Prepare agenda memorandum.	0.30 hrs
11/07/18	JEM	Review correspondence from Quarles regarding status of D.R. Horton utility turnover.	0.10 hrs
11/08/18	MKR	Review meeting follow-up; prepare for board meeting; review forbearance agreements.	1.50 hrs
11/08/18	APA	Prepare agenda memorandum.	0.80 hrs
11/12/18	MCE	Follow-up regarding special-purpose entity outstanding balances.	0.10 hrs
11/13/18	JEM	Review status regarding phase 3 utility turnover.	0.10 hrs
11/14/18	MCE	Prepare for and travel to board meeting; attend conference call with Popeilka and Brizendine; follow-up.	2.40 hrs
11/14/18	JEM	Review correspondence from Daddis regarding status of phase 3 utility turnover.	0.10 hrs
11/15/18	MCE	Prepare for, travel to and attend board meeting; return travel; meeting follow-up.	3.10 hrs
11/15/18	MKR	Review status of board member elections; prepare correspondence regarding same; attend board meeting by phone.	0.90 hrs
11/19/18	MCE	Research accounts receivable.	0.50 hrs

Total fees for this matter $2,846.50

MATTER SUMMARY

Papp, Annie M. - Paralegal	1.10 hrs	125 /hr	$137.50
Merritt, Jason E.	0.40 hrs	330 /hr	$132.00
Eckert, Michael C.	6.10 hrs	310 /hr	$1,891.00
Rigoni, Michelle K.	2.80 hrs	245 /hr	$686.00
TOTAL FEES			$2,846.50
TOTAL CHARGES FOR THIS MATTER			**$2,846.50**

BILLING SUMMARY

Papp, Annie M. - Paralegal	1.10 hrs	125 /hr	$137.50
Merritt, Jason E.	0.40 hrs	330 /hr	$132.00
Eckert, Michael C.	6.10 hrs	310 /hr	$1,891.00
Rigoni, Michelle K.	2.80 hrs	245 /hr	$686.00
TOTAL FEES			$2,846.50
TOTAL CHARGES FOR THIS BILL			**$2,846.50**

Please include the bill number on your check.

Date Rec'd Rizzetta & Co., Inc. JAN 04 2019
D/M approval_____ Date_____
Date entered_____
Fund_____ GL_____ OC_____
Check#_____

Johnson Engineering, Inc.
Remit To:
P.O. Box 2112
Fort Myers, FL 33902
Ph: 239.334.0046 Fax: 239.334.3661

Invoice

Project Manager Andrew Tilton

December 13, 2018
Project No: 20044888-001
Invoice No: 132

RECEIVED
DEC 19 2018

FEID #59-1173834

Accounts Payable
CFM CDD
c/o Rizzetta & Company, Inc.
9530 Marketplace Road, Suite 206
Fort Myers, FL 33912

Date Rec'd Rizzetta & Co., Inc.
T/M approval Belinda Blandon Date 1/2/19
DEC 20 2018
Date entered
Fund 001 GL 51300 OC 3107
Check #

Project 20044888-001 CFM CDD General Engineering

Professional Services through December 9, 2018

Phase 01 General Engineering

Professional Personnel

		Hours	Rate	Amount
Ecologist I				
Thomas, Gregory	11/21/2018	2.00	100.00	200.00
Data management of Time Zero vegetation data				
Thomas, Gregory	11/27/2018	7.00	100.00	700.00
Time Zero report writing				
Thomas, Gregory	11/29/2018	7.00	100.00	700.00
Time Zero report writing				
Thomas, Gregory	11/30/2018	2.00	100.00	200.00
Time Zero report writing				
Thomas, Gregory	12/3/2018	3.00	100.00	300.00
Finalizing figures, tables and appendices				
Thomas, Gregory	12/4/2018	5.00	100.00	500.00
Edits to time zero monitoring report; proofreading first draft; editing first draft				
Thomas, Gregory	12/5/2018	7.00	100.00	700.00
Finalizing second draft of time zero monitoring report				
Ecologist III				
Nychyk, Andrew	12/7/2018	2.00	130.00	260.00
Review Mag Landing TZ mitigation monitoring report				
Technician II				
Philpot, Kyle	11/28/2018	3.50	65.00	227.50
Working on vegetation data entry.				
Technician III				
Isley, Robert	11/12/2018	2.00	75.00	150.00
Veg data management time 0				
Isley, Robert	11/14/2018	1.50	75.00	112.50
Veg data management time 0				
Isley, Robert	11/15/2018	2.00	75.00	150.00
Veg data management time 0				
Isley, Robert	11/16/2018	6.00	75.00	450.00
Veg data management time 0				
Isley, Robert	11/27/2018	3.50	75.00	262.50
Veg data management time 0				

Technician II					
Keen, Cynthia	11/12/2018	.25	65.00	16.25	
James Fridel, resident of Herons Glen phone call re: status on EarthBalance, email to B Blandon, referred Mr. Fridel to District Manager					
Keen, Cynthia	11/20/2018	.50	65.00	32.50	
B Blandon email on 20844 Castle Pines sidewalk (S Streeter) and email on Ownership key map to A Tilton for followup					
Keen, Cynthia	12/6/2018	1.00	65.00	65.00	
Chestnut and Redstone drainage issue, 2017 Inspection Report, drainage maps from Lee Co LDO, photographs sent to A Tilton, D Robson for further discussion with B Blandon					
Engineer VIII					
Robson, David	11/15/2018	1.50	170.00	255.00	
Attend BOS meeting.					
Robson, David	12/6/2018	1.00	170.00	170.00	
Review DR Horton Parcel A & J Utility turnover documents. Confirm utilities with easement and roadway tracts.					
Robson, David	12/6/2018	2.00	170.00	340.00	
Review with District Manager Resident issues with drainage/roadway crosswalk/mitigation action.					
Engineer IX					
Tilton, Andrew	12/6/2018	1.00	190.00	190.00	
Backyard draiange issues					
Tilton, Andrew	12/7/2018	.50	190.00	95.00	
Backyard drainage issues					
Totals		61.25		6,076.25	
Total Labor					**6,076.25**
			Total this Phase		**$6,076.25**

Phase REIM Reimbursables

Reimbursable Expenses

Project Expenses Reimbursable				
12/6/2018	Tropical Hardware	PVC Pipe	27.90	
	Total Reimbursables		**27.90**	**27.90**
		Total this Phase		**$27.90**
		Total this Invoice		**$6,104.15**

LCEC
PEOPLE. POWER. POSSIBILITIES.

Visit us online at www.lcec.net
Phone: (239) 656-2300
Toll Free: 1-800-599-2356

Customer Name	CFM COMMUNITY DEVELOPMENT DISTRICT
Account #	6571809552

Billing Date:	12/20/2018
Current Bill Due Date:	01/11/2019
Previous Balance	$1,678.98
Payment - 12/11/18	-$1,678.98
Current Charges Due 01/11/19	**$1,678.98**

Important Messages

May your season be merry, bright, and safe!
Use LED lights.

Total Amount Due
$1,678.98
Due Date: 01/11/19

RECEIVED
DEC 27 2018

Service Address: MAGNOLIA LANDING LN & PARK, NORTH FORT MYERS, 33917
Service Location: 1000085908

Date Rec'd Rizzetta & Co., Inc.
O/M approval Belinda Blandon Date 1/2/19
Date entered DEC 27 2018
Fund 001 GL 53100 OC 4307
Check #

Service Dates: 11/16/18 - 12/17/18

Current Service Detail

Light Energy Charge		$6.74
150 watt HPS		$14.17
13' Decorative Pole		$12.75
Power Cost Adjustment	69 kWh @ 0.00630	$0.43
Franchise Fee Lee County		$1.61
Gross Receipts Tax		$0.22
Total Current Charges for this Location		**$35.92**

Service Address: MAGNOLIA LANDING LN & PARK, NORTH FORT MYERS, 33917
Service Location: 1000085909

Service Dates: 11/16/18 - 12/17/18

Current Service Detail

Light Energy Charge		$6.74
150 watt HPS		$14.17
13' Decorative Pole		$12.75
Power Cost Adjustment	69 kWh @ 0.00630	$0.43
Franchise Fee Lee County		$1.61
Gross Receipts Tax		$0.22
Total Current Charges for this Location		**$35.92**

KEEP
SEND

LCEC
PEOPLE. POWER. POSSIBILITIES.

Post Office Box 3455
North Fort Myers,
FL 33918-3455

Account Number	6571809552
Current Charges Due 01/11/19	$1,678.98
Total Amount Due	$1,678.98

Checks must be in U.S. funds and drawn on a U.S. bank.

PAY YOUR BILL 24/7
ONLINE: Check or credit/debit card at www.lcec.net or download the mobile app.
PHONE: (239) 656-2300 or (800) 599-2356

VISA MasterCard DISCOVER AMERICAN EXPRESS

LCEC
PO BOX 31477
TAMPA, FL 33631-3477

19

4914 2 AB 0.405 5 4914
CFM COMMUNITY DEVELOPMENT DISTRICT
CFM COMMUNITY DEVELOPMENT DISTRICT
9530 MARKETPLACE RD STE 206
FORT MYERS FL 33912-0393

Service Address: 3501 AVENIDA DEL VERA BLVD, NORTH FORT MYERS, 33917
Service Location: 1000091001

Service Dates: 11/16/18 - 12/17/18

Current Service Detail		
Light Energy Charge		$1.92
100 watt LED		$9.13
Power Cost Adjustment	20 kWh @ 0.00630	$0.13
Franchise Fee Lee County		$0.53
Gross Receipts Tax		$0.07
Total Current Charges for this Location		**$11.78**

Service Address: 3501 AVENIDA DEL VERA BLVD, NORTH FORT MYERS, 33917
Service Location: 1000091002

Service Dates: 11/16/18 - 12/17/18

Current Service Detail		
Light Energy Charge		$1.92
100 watt LED		$9.13
Power Cost Adjustment	20 kWh @ 0.00630	$0.13
Franchise Fee Lee County		$0.53
Gross Receipts Tax		$0.07
Total Current Charges for this Location		**$11.78**

Service Address: MAGNOLIA LANDING LN, NORTH FORT MYERS, 33917
Service Location: 1000111790

Service Dates: 11/16/18 - 12/17/18

Current Service Detail		
Light Energy Charge		$6.74
150 watt HPS		$14.17
13' Decorative Pole		$12.75
Power Cost Adjustment	69 kWh @ 0.00630	$0.43
Franchise Fee Lee County		$1.61
Gross Receipts Tax		$0.22
Total Current Charges for this Location		**$35.92**

Service Address: MAGNOLIA LANDING LN, NORTH FORT MYERS, 33917
Service Location: 1000111791

Service Dates: 11/16/18 - 12/17/18

Current Service Detail		
Light Energy Charge		$6.74
150 watt HPS		$14.17
13' Decorative Pole		$12.75
Power Cost Adjustment	69 kWh @ 0.00630	$0.43
Franchise Fee Lee County		$1.61
Gross Receipts Tax		$0.22
Total Current Charges for this Location		**$35.92**

Service Address: MAGNOLIA LANDING LN, NORTH FORT MYERS, 33917
Service Location: 1000111792

Service Dates: 11/16/18 - 12/17/18

Current Service Detail		
Light Energy Charge		$6.74
150 watt HPS		$14.17
13' Decorative Pole		$12.75
Power Cost Adjustment	69 kWh @ 0.00630	$0.43
Franchise Fee Lee County		$1.61
Gross Receipts Tax		$0.22
Total Current Charges for this Location		**$35.92**

Service Address: 3000 MAGNOLIA LANDING LN, NORTH FORT MYERS, 33917
Service Location: 1000170338

Service Dates: 11/16/18 - 12/17/18

Current Service Detail		
Light Energy Charge		$6.74
150 watt HPS		$14.17
13' Decorative Pole		$12.75
Power Cost Adjustment	69 kWh @ 0.00630	$0.43
Franchise Fee Lee County		$1.61
Gross Receipts Tax		$0.22
Total Current Charges for this Location		**$35.92**

Service Address: 3000 MAGNOLIA LANDING LN, NORTH FORT MYERS, 33917
Service Location: 1000170339

Service Dates: 11/16/18 - 12/17/18

Current Service Detail		
Light Energy Charge		$6.74
150 watt HPS		$14.17
13' Decorative Pole		$12.75
Power Cost Adjustment	69 kWh @ 0.00630	$0.43
Franchise Fee Lee County		$1.61
Gross Receipts Tax		$0.22
Total Current Charges for this Location		**$35.92**

Service Address: 3000 MAGNOLIA LANDING LN, NORTH FORT MYERS, 33917
Service Location: 1000170340

Service Dates: 11/16/18 - 12/17/18

Current Service Detail		
Light Energy Charge		$6.74
150 watt HPS		$14.17
13' Decorative Pole		$12.75
Power Cost Adjustment	69 kWh @ 0.00630	$0.43
Franchise Fee Lee County		$1.61
Gross Receipts Tax		$0.22
Total Current Charges for this Location		**$35.92**

Service Address: 3000 MAGNOLIA LANDING LN, NORTH FORT MYERS, 33917
Service Location: 1000170341

Service Dates: 11/16/18 - 12/17/18

Current Service Detail		
Light Energy Charge		$6.74
150 watt HPS		$14.17
13' Decorative Pole		$12.75
Power Cost Adjustment	69 kWh @ 0.00630	$0.43
Franchise Fee Lee County		$1.61
Gross Receipts Tax		$0.22
Total Current Charges for this Location		**$35.92**

Service Address: 3000 MAGNOLIA LANDING LN, NORTH FORT MYERS, 33917
Service Location: 1000170342

Service Dates: 11/16/18 - 12/17/18

Current Service Detail		
Light Energy Charge		$6.74
150 watt HPS		$14.17
13' Decorative Pole		$12.75
Power Cost Adjustment	69 kWh @ 0.00630	$0.43
Franchise Fee Lee County		$1.61
Gross Receipts Tax		$0.22
Total Current Charges for this Location		**$35.92**

Service Address: 3501 AVENIDA DEL VERA BLVD # LIGHTS, NORTH FORT MYERS, 33917
Service Location: 1000240195

Service Dates: 11/16/18 - 12/17/18

Current Service Detail		
Light Energy Charge		$6.74
150 watt HPS		$14.17
13' Decorative Pole		$12.75
Power Cost Adjustment	69 kWh @ 0.00630	$0.43
Franchise Fee Lee County		$1.61
Gross Receipts Tax		$0.22
Total Current Charges for this Location		**$35.92**

Service Address: 3501 AVENIDA DEL VERA BLVD # LIGHTS, NORTH FORT MYERS, 33917
Service Location: 1000240196

Service Dates: 11/16/18 - 12/17/18

Current Service Detail		
Light Energy Charge		$6.74
150 watt HPS		$14.17
13' Decorative Pole		$12.75
Power Cost Adjustment	69 kWh @ 0.00630	$0.43
Franchise Fee Lee County		$1.61
Gross Receipts Tax		$0.22
Total Current Charges for this Location		**$35.92**

Service Address: 3501 AVENIDA DEL VERA BLVD # LIGHTS, NORTH FORT MYERS, 33917
Service Location: 1000240197

Service Dates: 11/16/18 - 12/17/18

Current Service Detail		
Light Energy Charge		$6.74
150 watt HPS		$14.17
13' Decorative Pole		$12.75
Power Cost Adjustment	69 kWh @ 0.00630	$0.43
Franchise Fee Lee County		$1.61
Gross Receipts Tax		$0.22
Total Current Charges for this Location		**$35.92**

Service Address: 3501 AVENIDA DEL VERA BLVD # LIGHTS, NORTH FORT MYERS, 33917
Service Location: 1000240198

Service Dates: 11/16/18 - 12/17/18

Current Service Detail		
Light Energy Charge		$6.74
150 watt HPS		$14.17
13' Decorative Pole		$12.75
Power Cost Adjustment	69 kWh @ 0.00630	$0.43
Franchise Fee Lee County		$1.61
Gross Receipts Tax		$0.22
Total Current Charges for this Location		**$35.92**

Service Address: 3501 AVENIDA DEL VERA BLVD # LIGHTS, NORTH FORT MYERS, 33917
Service Location: 1000240199

Service Dates: 11/16/18 - 12/17/18

Current Service Detail		
Light Energy Charge		$6.74
150 watt HPS		$14.17
13' Decorative Pole		$12.75
Power Cost Adjustment	69 kWh @ 0.00630	$0.43
Franchise Fee Lee County		$1.61
Gross Receipts Tax		$0.22
Total Current Charges for this Location		**$35.92**

Service Address: 3501 AVENIDA DEL VERA BLVD # LIGHTS, NORTH FORT MYERS, 33917
Service Location: 1000240205

Service Dates: 11/16/18 - 12/17/18

Current Service Detail		
Light Energy Charge		$6.74
150 watt HPS		$14.17
13' Decorative Pole		$12.75
Power Cost Adjustment	69 kWh @ 0.00630	$0.43
Franchise Fee Lee County		$1.61
Gross Receipts Tax		$0.22
Total Current Charges for this Location		**$35.92**

Service Address: 3501 AVENIDA DEL VERA BLVD # LIGHTS, NORTH FORT MYERS, 33917
Service Location: 1000240206

Service Dates: 11/16/18 - 12/17/18

Current Service Detail		
Light Energy Charge		$6.74
150 watt HPS		$14.17
13' Decorative Pole		$12.75
Power Cost Adjustment	69 kWh @ 0.00630	$0.43
Franchise Fee Lee County		$1.61
Gross Receipts Tax		$0.22
Total Current Charges for this Location		**$35.92**

Service Address: 3501 AVENIDA DEL VERA BLVD # LIGHTS, NORTH FORT MYERS, 33917
Service Location: 1000240207

Service Dates: 11/16/18 - 12/17/18

Current Service Detail		
Light Energy Charge		$6.74
150 watt HPS		$14.17
13' Decorative Pole		$12.75
Power Cost Adjustment	69 kWh @ 0.00630	$0.43
Franchise Fee Lee County		$1.61
Gross Receipts Tax		$0.22
Total Current Charges for this Location		**$35.92**

Service Address: 3501 AVENIDA DEL VERA BLVD # LIGHTS, NORTH FORT MYERS, 33917
Service Location: 1000240208

Service Dates: 11/16/18 - 12/17/18

Current Service Detail		
Light Energy Charge		$6.74
150 watt HPS		$14.17
13' Decorative Pole		$12.75
Power Cost Adjustment	69 kWh @ 0.00630	$0.43
Franchise Fee Lee County		$1.61
Gross Receipts Tax		$0.22
Total Current Charges for this Location		**$35.92**

Service Address: 3501 AVENIDA DEL VERA BLVD # LIGHTS, NORTH FORT MYERS, 33917
Service Location: 1000240209

Service Dates: 11/16/18 - 12/17/18

Current Service Detail		
Light Energy Charge		$6.74
150 watt HPS		$14.17
13' Decorative Pole		$12.75
Power Cost Adjustment	69 kWh @ 0.00630	$0.43
Franchise Fee Lee County		$1.61
Gross Receipts Tax		$0.22
Total Current Charges for this Location		**$35.92**

Service Address: 3501 AVENIDA DEL VERA BLVD # LIGHTS, NORTH FORT MYERS, 33917
Service Location: 1000240215

Service Dates: 11/16/18 - 12/17/18

Current Service Detail		
Light Energy Charge		$6.74
150 watt HPS		$14.17
13' Decorative Pole		$12.75
Power Cost Adjustment	69 kWh @ 0.00630	$0.43
Franchise Fee Lee County		$1.61
Gross Receipts Tax		$0.22
Total Current Charges for this Location		**$35.92**

Service Address: 3501 AVENIDA DEL VERA BLVD # LIGHTS, NORTH FORT MYERS, 33917
Service Location: 1000240216

Service Dates: 11/16/18 - 12/17/18

Current Service Detail		
Light Energy Charge		$6.74
150 watt HPS		$14.17
13' Decorative Pole		$12.75
Power Cost Adjustment	69 kWh @ 0.00630	$0.43
Franchise Fee Lee County		$1.61
Gross Receipts Tax		$0.22
Total Current Charges for this Location		**$35.92**

Service Address: 3501 AVENIDA DEL VERA BLVD # LIGHTS, NORTH FORT MYERS, 33917
Service Location: 1000240217

Service Dates: 11/16/18 - 12/17/18

Current Service Detail		
Light Energy Charge		$6.74
150 watt HPS		$14.17
13' Decorative Pole		$12.75
Power Cost Adjustment	69 kWh @ 0.00630	$0.43
Franchise Fee Lee County		$1.61
Gross Receipts Tax		$0.22
Total Current Charges for this Location		**$35.92**

Service Address: 3501 AVENIDA DEL VERA BLVD # LIGHTS, NORTH FORT MYERS, 33917
Service Location: 1000240218

Service Dates: 11/16/18 - 12/17/18

Current Service Detail		
Light Energy Charge		$6.74
150 watt HPS		$14.17
13' Decorative Pole		$12.75
Power Cost Adjustment	69 kWh @ 0.00630	$0.43
Franchise Fee Lee County		$1.61
Gross Receipts Tax		$0.22
Total Current Charges for this Location		**$35.92**

Service Address: 3501 AVENIDA DEL VERA BLVD # LIGHTS, NORTH FORT MYERS, 33917
Service Location: 1000240219

Service Dates: 11/16/18 - 12/17/18

Current Service Detail		
Light Energy Charge		$6.74
150 watt HPS		$14.17
13' Decorative Pole		$12.75
Power Cost Adjustment	69 kWh @ 0.00630	$0.43
Franchise Fee Lee County		$1.61
Gross Receipts Tax		$0.22
Total Current Charges for this Location		**$35.92**

LEE COUNTY
SOUTHWEST FLORIDA

RECEIVED
DEC 27 2018

Invoice

BILL TO
CFM CDD Belinda Blanton District Manager Rizzetta & Co., Inc. 9530 Marketplace Road, Suite 206 Ft. Myers, FL 33912

FROM
LEE COUNTY NATURAL RESOURCES 1500 Monroe Street Fort Myers, FL 33901

DATE	INVOICE #	TERMS
12/19/2018	2138	Net 30

DESCRIPTION	QTY	RATE	AMOUNT
Year 2019 Annual Regulatory Program and Surveillance Fees for Municipal Separate Storm Sewer System Permit		560.00	560.00
For Internal Use Only: OC5379015502.504970			

Date rec'd Rizzetta & Co., Inc. _____
D/M approval Belinda Blanton Date 1/2/19
Date entered DEC 27 2018
Fund _____ GL 53800 OC 4614
Check # _____

Make Checks Payable to:LEE COUNTY BOARD OF COUNTY COMMISSIONERS (LEE COUNTY BOCC)

TOTAL $560.00

Please Remit to:
Lee County Comm. Dev/Public Works Center
1500 Monroe Street, 4th Floor Fort Myers, FL 33901
Attn: Fiscal Pool

For Questions, please call Amanda Wilson 239-533-8551

Cycle 4 Year 1 NPDES MS4 Permit Fees
Chapter 62-4 versus proposed ILA

Municipal Fees	Permit Fees per Chapter 62-4	Proposed by Agreement	Net Savings by Agreement
Bonita Springs	$ 1,987	$ 1,456	$ 530
Cape Coral	$ 7,054	$ 4,761	$ 2,293
Fort Myers	$ 3,001	$ 1,617	$ 1,384
Fort Myers Beach	$ 314	$ 163	$ 151
Sanibel	$ 289	$ 168	$ 121
Lee County	$ 14,092	$ 10,171	$ 3,922
Municipal Sub-Total	$ 26,736	$ 18,336	$ 8,400

District Fees

San Carlos Estates	$ 1,875	$ 560	$ 1,315
Bay Creek/Bayside	$ 1,875	$ 560	$ 1,315
Brooks	$ 1,875	$ 560	$ 1,315
Gateway	$ 1,875	$ 560	$ 1,315
East Mulloch	$ 1,875	$ 560	$ 1,315
LAMSID	$ 1,875	$ 560	$ 1,315
FDOT	$ 1,875	$ 560	$ 1,315
River Ridge	$ 1,875	$ 560	$ 1,315
Heritage Palms	$ 1,875	$ 560	$ 1,315
Lucaya	$ 1,875	$ 560	$ 1,315
Miromar Lakes	$ 1,875	$ 560	$ 1,315
River Hall	$ 1,875	$ 560	$ 1,315
Catalina at Winkler Preserve	$ 1,875	$ 560	$ 1,315
CFM CDD	$ 1,875	$ 560	$ 1,315
Colonial Country Club	$ 1,875	$ 560	$ 1,315
Districts Sub-Total	$ 28,125	$ 8,400	$ 19,725

	W/O Agreement	W/ Agreement	Savings
Permit Total	$ 54,861	$ 26,736	$ 28,125

The Permit Fee is established by Chapter 62-4 F.A.C.

"For permitted counties with populations greater rhan 100,000 the permit fee is $13,000 plus $0.025 times the total permitted population. (b) Except as provided in paragraph 62-4.052(10)(c), F.A.C., permittees and co-permittees to each permit will be invoiced individually for their respective share of the annual fee. The individual fee shall be pro-rated based on the percentage of each co-permittee's population as compared to the total permit population listed above. Additional fees apply as follows:

1. Invoices under this subsection shall be a minimum of $100 to cover processing costs.

2. For co-permittees that do not have associated populations, such as Florida Department of Transportation Districts and Drainage Districts, other than existing state water management districts, the fee shall be $1,315.

(c) ***For convenience, co-permittees of any one permit may choose to receive only one invoice to cover the entire annual fee. In order to receive one invoice, co-permittees to any one permit shall:***

1. Mutually agree to share the cost of the annual fee and be party to an executed interlocal agreement for cost sharing among all co-permittees.

2. Designate a specific co-permittee to act as representative for all co-permittees regarding the annual fee. The fee designee shall notify the Department in writing, not less than 120 days prior to the end of a calendar year, that only one invoice will be required for the annual fee for the forthcoming calendar year."

Lee County
Southwest Florida

John E. Manning
District One

Cecil L Pendergrass
District Two

Larry Kiker
District Three

Brian Hamman
District Four

Frank Mann
District Five

Roger Desjarlais
County Manager

Richard Wm. Wesch
County Attorney

Donna Marie Collins
Hearing Examiner

December 20, 2018

CFM CDD
Belinda Blantont, District Manager
Rizzetta & Company, Inc
9530 Marketplace Road, Suite 206
Ft. Myers, FL 33912

SUBJECT: NPDES Permit Fee Allocation

Dear Ms. Blanton:

Please find the enclosed Invoice No. 2138 in the amount of $560.00 representing the CFM Community Development District's cost share for the 2019 NPDES co-permittee fee. The fees are delineated in the attached "Cycle 4 Year 2 NPDES MS4 Permit Fees Chapter 62-4 versus proposed ILA" spreadsheet. The fee remains unchanged from prior years and relevant back-up is provided for your information.

Should you require any further information, do not hesitate to contact this office.

Sincerely,

DEPARTMENT OF PUBLIC WORKS
Division of Natural Resources

Keith Kibbey

Keith Kibbey
Operations Manager

Enclosures

2018 REAL ESTATE NOTICE OF AD VALOREM TAXES AND NON-AD VALOREM ASSESSMENTS FOR LEE COUNTY, FLORIDA

Account Number:
10-43-24-00-00003.0100

Back Taxes Due
Contact Our Office

Personal ID Number:
18-00248116

District:
039

Site Address:
MAGNOLIA LANDING C/E

Legal Description:
PARL LOC IN NE 1/4 DESC AS
LESSED OUT PARCELS IN
INSTR#2011000154883
INSTRUMENT #: 2008000291948

Values and Exemptions:

MARKET ASSESSED VALUE	4(
CAP ASSESSED VALUE	4(
TAXABLE VALUE	4(

★ See message below.

Amount Due:	If Paid In:	
$6.29	December	20
$6.35	January	20
$6.42	February	20
$6.48	March	20

2
5 - 134

CFM CDD
3434 COLWELL AVE STE 200
TAMPA FL 33614-8390

Ad Valorem Taxes Levying Authority	Telephone	Mill Rate	Assessed	Exempt	Taxable	Amou
LEE COUNTY GENERAL REVENUE	239.533.2221	4.0506	405	0	405	1.
PUBLIC SCHOOL - BY LOCAL BOARD	239.337.8215	2.2480	405	0	405	0.
PUBLIC SCHOOL - BY STATE LAW	239.337.8215	4.1530	405	0	405	1.
LEE COUNTY ALL HAZARDS - MSTU	239.533.2221	0.0693	405	0	405	0.
LEE COUNTY LIBRARY FUND	239.533.2221	0.4956	405	0	405	0.
LEE COUNTY UNINCORPORATED - MSTU	239.533.2221	0.8398	405	0	405	0.
SFL WATER MGMT-DISTRICT LEVY	561.686.8800	0.1209	405	0	405	0.
SFL WATER MGMT-EVERGLADE CONST	561.686.8800	0.0417	405	0	405	0.
SFL WATER MGMT-OKEECHOBEE LEVY	561.686.8800	0.1310	405	0	405	0.
LEE COUNTY HYACINTH CONTROL	239.694.2174	0.0239	405	0	405	0.
LEE COUNTY MOSQUITO CONTROL	239.694.2174	0.2636	405	0	405	0.
NORTH FORT MYERS FIRE DISTRICT	239.997.8654	3.5000	405	0	405	1.
WEST COAST INLAND NAVIGATION DISTRICT	941.485.9402	0.0394	405	0	405	0.

Non-Ad Valorem Assessments Levying Authority	Telephone	Rate	Basis	Amou

Date rec'd Rizzetta & Co., Inc. _____
D/M approval Belinda Blandon Date 1/2/19
Date entered DEC 20 2018
Fund 001 GL 51300 OC 4905
Check # _____

Beth-CP
BY:
RECEIVED DEC 17 2018

Keep for your records

2018 Combined Total Ad Valorem and Non-Ad Valorem: 6.

2018 Real Estate Notice

Corrected Notice
12/04/2018

Back Taxes Due
Contact Our Office

Phone/Email Contact: _____

★ If the address below is not correct, complete the Change of Mailing Address form on the reverse side or visit www.leepa.org to update your address.

CFM CDD
3434 COLWELL AVE SUITE 200
TAMPA FL 33614

Account: 10-43-24-00-00003.0100
Site Address: MAGNOLIA LANDING C/E
Personal ID Number: 18-00248116

For payment options and instructions refer to the back of this notice or visit us online at www.leetc.com.

If Paid In		Amount Due
December	2018	$6.29
January	2019	$6.35
February	2019	$6.42
March	2019	$6.48

Make check payable to:
LEE COUNTY TAX COLLECTOR
PO BOX 1609
FORT MYERS FL 33902-1609

REAL ESTATE UNPAID TAX NOTICE FOR LEE COUNTY, FLORIDA

This notice shows the outstanding taxes due for this account. Tax certificates are a first lien against the property. A tax certificate holder can make application for tax deed at any time after two years have passed since the date of delinquency (April 1). If the tax deed application is not paid, the property may be sold at public auction.

★ If the address in the lower left corner of the payment coupon is not correct, complete the Change of Mailing Address form on the reverse side or visit www.leepa.org to update your address.

Account Number:
10-43-24-00-00003.0100

Site Address:
MAGNOLIA LANDING C/E

Legal Description:
PARL LOC IN NE 1/4 DESC AS
LESSED OUT PARCELS IN
INSTR#2011000154883
INSTRUMENT #: 2008000291948

CFM CDD
3434 COLWELL AVE SUITE 200
TAMPA FL 33614

Item ID	Tax Year	If payment is received by the last business day in: December 2018	January 2019
17-000262	2016	$31.15	$31.47
18-000262	2017	$400.45	$405.73
10-43-24-00-00003.0100	2018	$6.29	$6.35
Total Amount Due:		**$437.89**	**$443.55**

Date Rec'd Rizzetta & Co., Inc. _____
D/M approval Belinda Blandon Date 1/2/19
Date entered DEC 20 2018
Fund 001 GL 5500 OC 4905
Check # _____

RECEIVED
DEC 17 2018
BY: Beth-CP

The delinquent tax amount due is based on the date your payment is ***received*** by the Tax Collector, ***not*** the date postmarked. Personal and business checks are ***not*** accepted. See the reverse side for payment options.

121418

Real Estate Unpaid Tax Notice

Account: 10-43-24-00-00003.0100

If payment is received by the last business day in:

December 2018	January 2019
$437.89	$443.55

Indicate which item(s) you are paying. ☑

17-000262	2016	____
18-000262	2017	____
10-43-24-00-00003.0100	2018	____

Phone/Email Contact: _____

★ See message above.

Personal and business checks are not accepted. Remit cashier's check or money order in U.S. funds drawn on a U.S. bank payable to:

CFM CDD
3434 COLWELL AVE SUITE 200
TAMPA FL 33614

LEE COUNTY TAX COLLECTOR
PO BOX 630
FORT MYERS FL 33902-0630

INVOICE

Magnolia Landing Golf, LLC.
3501 Avenida Del Vera
North Fort Myers, FL 33917
239.543.4146

RECEIVED
JAN 21 2019

Date	Invoice #
Jan 1, 2019	1099

Bill to
CFM CDD
9530 Marketplace Rd
Suite 206
Fort Myers, FL 33912

Due Date	Billing Period
1/31/19	January 2019

Quantity	Description	Rate	Tax	Amount
1	Aerator Agreement & Water	625.00	0.00	625.00
			Total	**625.00**

Date Rec'd Rizzetta & Co. Inc
D/M approval Belinda Blandon Date 1/25/19
Date entered JAN 23 2019
Fund 001 GL 53800 OC 4614
Check #

INVOICE

Magnolia Landing Golf, LLC.
3501 Avenida Del Vera
North Fort Myers, FL 33917
239.543.4146

Date	Invoice #
Jan 1, 2019	1100

RECEIVED
JAN 21 2019

Bill to
CFM CDD
9530 Marketplace Rd
Suite 206
Fort Myers, FL 33912

Due Date	Billing Period
1/31/19	January 2019

Quantity	Description	Rate	Tax	Amount
1	Aerator Utility Cost	500.00	0.00	500.00
			Total	**500.00**

Date Rec'd Rizzetta & Co, Inc_____
D/M approval Belinda Blandon Date 1/25/19
Date entered JAN 23 2019
Fund_____ GL 53100 OC 4304
Check #_____

INVOICE

Magnolia Landing Golf, LLC.
3501 Avenida Del Vera
North Fort Myers, FL 33917
239.543.4146

Date	Invoice #
Jan 21, 2019	1101

Bill to
CFM CDD
9530 Marketplace Rd
Suite 206
Fort Myers, FL 33912

RECEIVED
JAN 21 2019

Due Date	Billing Period
1/31/19	

Quantity	Description	Rate	Tax	Amount
1	Removed 2 dead trees in the green spaces by 20479 & 20470 Sky Meadow	170.00	0.00	170.00
			Total	**170.00**

Date Rec'd Rizzetta & Co, Inc.
D/M approval Belinda Blandon Date 1/25/19
Date entered JAN 23 2019
Fund 001 GL 53900 OC 46004
Check #

INVOICE

Magnolia Landing Golf, LLC.
3501 Avenida Del Vera
North Fort Myers, FL 33917
239.543.4146

Date	Invoice #
Jan 21, 2019	1103

Bill to
CFM CDD
9530 Marketplace Rd
Suite 206
Fort Myers, FL 33912

RECEIVED
JAN 21 2019

Due Date	Billing Period
1/31/19	

Quantity	Description	Rate	Tax	Amount
1	Tree Removal Red Stone Cul-de-sac	75.00	0.00	75.00
			Total	**75.00**

Rec'd Rizzetta & Co, Inc
D/M approval Belinda Blandon Date 1/25/19
Date entered JAN 23 2019
Fund 001 GL 53900 OC 4604
Check #

Magnolia Landing Master Association, Inc.

INVOICE

14914 Winding Creek Court
Tampa, FL 33613
Phone 813.374.2363 Fax 813.374.2362

DATE: November 30, 2018
INVOICE # 347
FOR: *Landscape Maintenance*

RECEIVED
JAN 0 8 2019

Bill To:

CFM CDD
9530 Marketplace Road, Suite 206
Fort Myers, FL 33912
Phone: (239) 936-0913 Fax: (239) 936-1815

DESCRIPTION	AMOUNT
CDD Landscape Maintenance - November 2018	$ 3,494.58
TOTAL	$ 3,494.58

Date Rec'd Rizzetta & Co, Inc_____

D/M approval Belinda Blandon Date 1/11/19

Date entered JAN 0 9 2019

Fund 001 GL 53900 OC 4604

Check #_____

Make all checks payable to **Magnolia Landing Master Association Inc.**

THANK YOU FOR YOUR BUSINESS!

Magnolia Landing Master Association, Inc.

INVOICE

14914 Winding Creek Court
Tampa, FL 33613
Phone 813.374.2363 Fax 813.374.2362

DATE: December 31, 2018
INVOICE # 348
FOR: *Landscape Maintenance*

Bill To:

CFM CDD
9530 Marketplace Road, Suite 206
Fort Myers, FL 33912
Phone: (239) 936-0913 Fax: (239) 936-1815

RECEIVED
JAN 0 8 2019

DESCRIPTION	AMOUNT
CDD Landscape Maintenance - December 2018	$ 3,494.58
TOTAL	$ 3,494.58

Date Rec'd Rizzetta & Co, Inc_____
D/M approval Belinda Blandon Date 1/11/19
Date entered JAN 10 2019
Fund 001 GL 53900 OC 4604
Check #_____

Make all checks payable to **Magnolia Landing Master Association Inc.**

THANK YOU FOR YOUR BUSINESS!

Rizzetta & Company, Inc.
3434 Colwell Avenue
Suite 200
Tampa FL 33614

Invoice

Date	Invoice #
1/1/2019	INV0000037477

Bill To:

CFM CDD
3434 Colwell Avenue, Suite 200
Tampa FL 33614

RECEIVED
DEC 19 2018

Services for the month of	Terms	Client Number
January	Upon Receipt	00545

Description	Qty	Rate	Amount
District Management Services	1.00	$1,416.67	$1,416.67
Administrative Services	1.00	$450.00	$450.00
Accounting Services	1.00	$1,420.00	$1,420.00
Financial & Revenue Collections	1.00	$416.67	$416.67

\# 3101 $ 1416.67
3100 $ 450.00
3201 $ 1420.00
3111 $ 416.67

Date rec'd Rizzetta & Co., Inc. _____
D/M approval Belinda Blandon Date 1/2/19
Date entered DEC 20 2018
Fund 001 GL 5300 OC #
Check # _____

Subtotal	$3,703.34
Total	$3,703.34

Rizzetta Technology Services
3434 Colwell Avenue
Suite 200
Tampa FL 33614

Invoice

Date	Invoice #
1/1/2019	INV0000004024

Bill To:

CFM CDD
3434 Colwell Avenue, Suite 200
Tampa FL 33614

Services for the month of	Terms	Client Number
January		00545

Description	Qty	Rate	Amount
EMail Hosting	5	$15.00	$75.00
Website Hosting Services	1	$100.00	$100.00

Date rec'd Rizzetta & Co., Inc. _____
D/M approval Belinda Blandon Date 1/2/19
Date entered DEC 20 2018
Fund 001 GL 51300 OC 5103
Check # _____

Subtotal	$175.00
Total	$175.00

SOLITUDE
LAKE MANAGEMENT

RECEIVED
JAN 08 2019

INVOICE

Invoice Number: PI-A00217603
Invoice Date: 11/01/18

Voice: (888) 480-5253 Fax: (888) 358-0088

PROPERTY: CFM CDD - Magnolia Landing

SOLD TO: CFM CDD - Magnolia Landing
c/o Rizzetta & Company
9530 Market Place Road Ste. 206
Ft. Myers, FL 33912

CUSTOMER ID	CUSTOMER PO	Payment Terms	
C2226		Due upon receipt	
Sales Rep ID	**Shipment Method**	**Ship Date**	**Due Date**
Bill Kurth			11/01/18

Qty	Item / Description	Unit Price	Extension
1	Lake & Pond Management Services SVR05732 11/01/18 - 11/30/18 Lake & Pond Management Services	1,753.00	1,753.00

Date Rec'd Rizzetta & Co, Inc_____
D/M approval Belinda Blandon Date 1/11/19
JAN 09 2019
Date entered_____
Fund 001 GL 53800 OC 41605
Check #_____

PLEASE REMIT PAYMENT TO:

1320 Brookwood Drive, Suite H
Little Rock, AR 72202

Subtotal	**1,753.00**
Sales Tax	0.00
Total Invoice	1,753.00
Payment Received	0.00
TOTAL	**1,753.00**

SOLITUDE
LAKE MANAGEMENT

Voice: (888) 480-5253 Fax: (888) 358-0088

INVOICE

Invoice Number: PI-A00230632
Invoice Date: 01/01/19

PROPERTY: CFM CDD - Magnolia Landing

SOLD TO: CFM CDD - Magnolia Landing
c/o Rizzetta & Company
9530 Market Place Road Ste. 206
Ft. Myers, FL 33912

RECEIVED
JAN 08 2019

CUSTOMER ID	CUSTOMER PO	Payment Terms	
C2226		Due upon receipt	
Sales Rep ID	**Shipment Method**	**Ship Date**	**Due Date**
Bill Kurth			01/01/19

Qty	Item / Description	Unit Price	Extension
1	Lake & Pond Management Services SVR05732 01/01/19 - 01/31/19 Lake & Pond Management Services	1,753.00	1,753.00

Date Rec'd Rizzetta & Co, Inc_____
D/M approval Belinda Blandon Date 1/11/19
Date entered JAN 09 2019
Fund 001 GL 53800 OC 46005
Check #_____

PLEASE REMIT PAYMENT TO:

1320 Brookwood Drive, Suite H
Little Rock, AR 72202

Subtotal	**1,753.00**
Sales Tax	0.00
Total Invoice	1,753.00
Payment Received	0.00
TOTAL	**1,753.00**

www.solitudelakemanagement.com

www.aeratorsaquatics4lakesnponds.com

Classified/Legal Advertising Invoice

The Breeze Legals

2510 DEL PRADO BLVD.

CAPE CORAL, FL
33904
(239) 574-1110

CFM/CDD
12750 CITRUS PARK LANE
SUITE 115
TAMPA, FL

33625

12/11/2018 1:52:06PM

No: 112401

Phone: 239 936-0913

Ad No	Customer No:	Start Date	Stop Date	Category:	Classification:
112401	**L03434**	**12-12-2018**	**12-12-2018**	**Legals**	**MISCELLANEOUS**

Order No	Rate:	Lines:	Words:	Inches:		Cost	Payments	Balance
	LA	**106**	**360**	**10.31**		**53.00**	**.00**	**53.00**

Publications ... Runs	Solicitor:	Origin:	Sales Rep:	Credit Card	Credit Card Number	Card Expire
Breeze Legals ... 1 **Online Legals ... 1**	**SM**	**17**	**3**			

Identifier
NOTICE OF PUBLIC MEETING CFM COMMUNITY DEVELOPMENT DISTRICT The Board of Supervisors of the CFM Community

RECEIVED
DEC 17 2018
ate rec'd Mizzetta & Co., Inc.
/M approval Belinda Blandon Date 1/2/19
ate entered DEC 17 2018
und 001 GL 51300 OC 4801
heck #

*=Extend Expiration Date

CAPE CORAL BREEZE
PUBLISHED CAPE CORAL, FLA

Affidavit of Publication

State of Florida
County of Lee
Before the undersigned authority personally appeared Jay Hill, who on oath says that he/she is the ADVERTISING REPRESENTATIVE of the Cape Coral Breeze newspaper, published at Cape Coral, Lee County, Florida that the attached copy of advertisement, being a Legal Notice, in the matter of Notice of Public Meeting CFM Community Development District, as published in said newspaper in the issues of December 12, 2018. Affiant further says that the Cape Coral Breeze is a newspaper published at Cape Coral, said Lee County, Florida and that the said newspaper has heretofore been continuously published in said Lee County, Florida, and has been entered as a second class periodicals matter at the post office in Fort Myers in said Lee County, Florida for a period of one year preceding the first publication of the attached copy of advertisement; and affiant further says that he has neither paid nor promised any person, firm or corporation any discount, rebate, commission or refund for the purpose of securing this advertisement for publication in the said Newspaper.

SWORN TO AND SUBSCRIBED before me this
December 12, 2018
Notary Public

112401

SUSAN M. DATO
Notary Public - State of Florida
Commission # FF 191914
My Comm. Expires Jan 21, 2019
Bonded through National Notary Assn.

NOTICE OF PUBLIC MEETING CFM COMMUNITY DEVELOPMENT DISTRICT

The Board of Supervisors of the CFM Community Development District ("District") will hold a regular meeting on Thursday, December 20, 2018, at 11:30 a.m. at the offices of Rizzetta & Company, Inc., located at 9530 Marketplace Road, Suite 206, Fort Myers, Florida 33912. A copy of the agenda for the meeting can be obtained from the District Office at 9530 Marketplace Road, Suite 206, Fort Myers, Florida 33912 or by phone at (239) 936-0913. Additionally, a copy of the agenda, along with any meeting materials available in an electronic format, may be obtained at www.cfmcdd.org. Items on the agenda may include, but are not limited to, District operations and maintenance activities, financial matters, capital improvements, and general administration activities.

The meeting is open to the public and will be conducted in accordance with the provisions of Florida law. There may be occasions when one or more Board Supervisors or staff members will participate by telephone. A speaker telephone will be present at the above location so that any Board Supervisor or staff member can attend the meeting by telephone and be fully informed of the discussions taking place either in person or by telephone communication. The meeting may be continued in progress without additional notice to a time, date, and location stated on the record.

Pursuant to provisions of the Americans with Disabilities Act, any person requiring special accommodations to participate in this meeting is asked to advise the District Office at (239) 936-0913, at least 48 hours before the meetings. If you are hearing or speech impaired, please contact the Florida Relay Service by dialing 7-1-1, or 1-800-955-8771 (TTY) / 1-800-955-8770 (Voice), for aid in contacting the District Office.

A person who decides to appeal any decision made by the Board with respect to any matter considered at the meeting is advised that the person will need a record of the proceedings and that, accordingly, the person may need to ensure that a verbatim record of the proceedings is made, including the testimony and evidence upon which the appeal is based.

Belinda Blandon
District Manager
Run Date: 12/12/2018
112401

BREEZE NEWSPAPERS

P.O.Box 151306
CAPE CORAL, FL 33915-1306

Statement Number	Billing Date
129040	12/31/18
Account Number	**Billing Period**
L03434	DECEMBER 2018
Total Amount Due	**Amount Enclosed**
53.00	

Advertising Invoice/Statement

Bill Account Name And Address	Remittance Address
CFM CDD 5844 OLD PASEO ROAD SUITE 100 WESLEY CHAPEL FL 33544 ATTN: ACCOUNTS PAYABLE	THE DAILY BREEZE C/O THE BREEZE CORP. P.O. BOX 151306 CAPE CORAL, FL 3391!

Please Detach Upper Portion And Return With Payment

Day	Reference	Description	Dimensions	Units	Rate	Amount
		PREVIOUS BALANCE				0.00
14	000112401	NOTICE OF PUBLIC MEE				53.00
	PRINTED IN:	BZ,OB				
		BZ DAILY BREEZE OB FMB OBSERVER				

RECEIVED
JAN - 9 2019
BY: .....

Date Rec'd Rizzetta & Co, Inc _____
D/M approval Belinda Blandon Date 1/11/19
Date entered JAN 1 1 2019
Fund 001 GL 51300 OC 4801
Check # _____

Message

BREEZE NEWSPAPERS PH # 239-574-1110

Totals			Ageing				
Display	Other Charges	Credits	Current	30 Days	60 Days	90 Days	Total Due
.00	53.00	.00	53.00	.00	.00	.00	53.00

Statement Number	Billing Date
129040	12/31/18
Account Number	**Billing Period**
L03434	DECEMBER 2018

Terms

Balance due upon receipt of this advertising statement

Contract Information	
Expiration Date	**Requirement**
Current Month	**Cumulative**

Name Of Advertiser

CFM CDD

Salesperson

SUSAN DATO

BREEZE NEWSPAPER
PO Box 151306
Cape Coral, FL 33915-130

CFM COMMUNITY DEVELOPMENT DISTRICT

DISTRICT OFFICE · 9530 MARKETPLACE ROAD · SUITE 206 · FT. MYERS, FLORIDA 33912

Operation and Maintenance Expenditures
February 2019
For Board Approval

Attached please find the check register listing the Operation and Maintenance expenditures paid from February 1, 2019 through February 28, 2019. This does not include expenditures previously approved by the Board.

The total items being presented: **$25,264.34**

Approval of Expenditures:

_____

_____ Chairperson

_____ Vice Chairperson

_____ Assistant Secretary

CFM Community Development District

Paid Operation & Maintenance Expenditures

February 1, 2019 Through February 28, 2019

Vendor Name	Check Number	Invoice Number	Invoice Description	Invoice Amount
Carr Riggs & Ingram LLC	002426	16594279	Audit Financials-Billing 09/30/18	$ 2,500.00
Hopping Green & Sams	002422	105054	General/Monthly Legal Services 12/18	$ 5,512.80
Hopping Green & Sams	002427	105440	General/Monthly Legal Services 1/19	$ 2,935.71
Johnson Engineering Inc	002428	133	General Engineering Services 1/19	$ 5,210.43
LCEC	002423	6571809552 1/19	Street Lights 3000 Magnolia Landing Ln 1/19	$ 1,678.98
Magnolia Landing Master Association, Inc.	002429	349	Landscape Maintenance 1/19	$ 3,494.58
Rizzetta & Company, Inc.	002424	INV00000038003	District Management Fees 2/19	$ 3,703.34
Rizzetta Technology Services, LLC	002425	INV0000004110	Website Hosting & Email Services 2/19	$ 175.00
The Daily Breeze	002430	112981-2/13/19	Legal Advertising 2/19	$ 53.50
Report Total				$ 25,264.34

CRI CARR RIGGS & INGRAM
CPAs and Advisors
500 Grand Boulevard, Suite 210
Miramar Beach, FL 32550
850-837-3141
Federal ID 72-1396621

RECEIVED
JAN 08 2019

CFM Community Development District
c/o Rezzetti & Co
9530 Marketplace Road #206
Fort Myers, FL 33912

Invoice No. 16594279 (include on check)
Date 12/31/2018
Client No. 20-03862.000

Professional services rendered as follows:

Initial progress billing on audited financial statements
as of September 30, 2018

Current Amount Due $ 2,500.00

Date Rec'd Rizzetta & Co, Inc_____
D/M approval Belinda Blandon Date 1/11/19
Date entered JAN 09 2019
Fund 001 GL 51300 OC 3202
Check #_____

0 - 30	31- 60	61 - 90	91 - 120	Over 120	Balance
2,500.00	0.00	0.00	0.00	0.00	2,500.00

We accept most major credit cards. Please complete the following information or contact our office to submit your payment over the phone.

Invoice Date: 12/31/2018 Client No: 20-03862
Invoice Number: 16594279 Total Amount Due: $ 2,500.00 CFM Community Development District

Name as it appears on card: _____

Billing Address: _____

Card # _____ Exp Date: _____ Security # _____

Payment Amount: _____ Signature: _____

Carr, Riggs & Ingram, LLC reserves the right to assess finance charges on past due balances up to the maximum amount allowed under State law.

Hopping Green & Sams
Attorneys and Counselors

119 S. Monroe Street, Ste. 300
P.O. Box 6526
Tallahassee, FL 32314
850.222.7500

========== STATEMENT ==========

January 22, 2019

CFM Community Development District
c/o Rizzetta & Company
12750 Citrus Park Lane, Suite 115
Tampa, FL 33626

Bill Number 105054
Billed through 12/31/2018

RECEIVED
JAN 3 1 2019

General Counsel/Monthly Meeting
CFMCDD 00001 MCE

FOR PROFESSIONAL SERVICES RENDERED

12/02/18	JEM	Review correspondence from Marquina regarding utility turnover; reply to same; review form of utility turnover documents.	0.20 hrs
12/03/18	JEM	Review correspondence from Pelham regarding utility turnover; prepare correspondence to Jones; prepare correspondence to Marquina regarding execution of utility conveyance documents.	0.40 hrs
12/04/18	MCE	Research accounts receivable; confer with Dhanpat.	2.30 hrs
12/04/18	JEM	Prepare correspondence to Blanton and Robson regarding turnover of utilities for parcels A and J; review correspondence from Marquina; reply to same.	0.30 hrs
12/04/18	APA	Research foreclosing on assessment lien.	0.80 hrs
12/05/18	JEM	Review correspondence from Pelham regarding utility turnover; review correspondence from Marquina regarding utility turnover; reply to same.	0.90 hrs
12/05/18	MKR	Review quit-claim bills of sale regarding utilities within district's road right-of-ways.	0.20 hrs
12/06/18	JEM	Review correspondence from Robson regarding parcels A and J utility turnovers.	0.10 hrs
12/06/18	APA	Prepare agenda memorandum.	0.40 hrs
12/07/18	JEM	Review correspondence from Ratz regarding utility turnover.	0.10 hrs
12/09/18	MCE	Confer with Marquina.	0.10 hrs
12/10/18	JEM	Review issues regarding turnover of parcels A and J utilities.	0.10 hrs
12/11/18	MCE	Review meeting minutes and provide comments.	0.20 hrs
12/12/18	MCE	Review FGUA issues with transfer; confer with Pelham.	0.50 hrs
12/12/18	JEM	Review correspondence from Marquina regarding parcels A and J utility turnovers; confer with Pelham.	0.50 hrs

12/12/18	APA	Analyze agenda package; prepare agenda memorandum.	1.00 hrs
12/13/18	MCE	Confer with Marquina.	0.10 hrs
12/13/18	JEM	Review correspondence from Marquina; reply to same; review correspondence from Jones; reply to same; review effect of plat dedications.	1.00 hrs
12/14/18	MCE	Review documents regarding conveyance requests; confer with Marquina.	0.40 hrs
12/14/18	JEM	Review status of parcels A and J utility turnovers.	0.10 hrs
12/16/18	MCE	Research and revise rules of procedure.	0.20 hrs
12/18/18	SRS	Research special assessment enforceability.	2.10 hrs
12/18/18	MKR	Review status of district contract with Solitude regarding lake maintenance.	0.30 hrs
12/18/18	APA	Follow-up with district regarding Solitude lake maintenance agreement and public facilities report.	0.40 hrs
12/20/18	MCE	Prepare for and attend board meeting.	1.50 hrs
12/20/18	SRS	Research special assessment enforcement.	0.70 hrs
12/23/18	MCE	Review utility issues; confer with Marquina; confer with Jones; revise affidavits; review draft meeting minutes.	1.10 hrs
12/25/18	JEM	Review correspondence from Marquina regarding utility conveyance; review correspondence from Jones.	0.10 hrs
12/26/18	MCE	Prepare conveyance documents regarding parcels A and J and distribute; research history regarding final lift agreement; prepare memorandum to board regarding same.	1.00 hrs
12/27/18	MCE	Research final lift issue.	1.40 hrs
12/28/18	MCE	Review transfer issues; confer with Sharpe.	0.50 hrs
12/28/18	SRS	Review correspondence regarding FGUA improvement and permit transfer.	0.30 hrs
	Total fees for this matter		$5,344.00

DISBURSEMENTS

Travel	150.83
Travel - Meals	17.97
Total disbursements for this matter	$168.80

MATTER SUMMARY

Papp, Annie M. - Paralegal	2.60 hrs	125 /hr	$325.00
Merritt, Jason E.	3.80 hrs	330 /hr	$1,254.00
Eckert, Michael C.	9.30 hrs	310 /hr	$2,883.00

Rigoni, Michelle K.	0.50 hrs	245 /hr	$122.50
Sandy, Sarah R.	3.10 hrs	245 /hr	$759.50
TOTAL FEES			$5,344.00
TOTAL DISBURSEMENTS			$168.80
TOTAL CHARGES FOR THIS MATTER			**$5,512.80**

BILLING SUMMARY

Papp, Annie M. - Paralegal	2.60 hrs	125 /hr	$325.00
Merritt, Jason E.	3.80 hrs	330 /hr	$1,254.00
Eckert, Michael C.	9.30 hrs	310 /hr	$2,883.00
Rigoni, Michelle K.	0.50 hrs	245 /hr	$122.50
Sandy, Sarah R.	3.10 hrs	245 /hr	$759.50
TOTAL FEES			$5,344.00
TOTAL DISBURSEMENTS			$168.80
TOTAL CHARGES FOR THIS BILL			**$5,512.80**

Please include the bill number on your check.

Date Rec'd Rizzetta & Co, Inc_____

D/M approval Belinda Blandon Date 2/4/19

Date entered FEB 01 2019

Fund 001 GL 51400 OC 3107

Check #_____

Hopping Green & Sams
Attorneys and Counselors

119 S. Monroe Street, Ste. 300
P.O. Box 6526
Tallahassee, FL 32314
850.222.7500

RECEIVED
FEB 19 2019

RECEIVED
FEB 19 2019

========== STATEMENT ==========

February 15, 2019

CFM Community Development District
c/o Rizzetta & Company
12750 Citrus Park Lane, Suite 115
Tampa, FL 33626

Bill Number 105440
Billed through 01/31/2019

General Counsel/Monthly Meeting
CFMCDD 00001 MCE

FOR PROFESSIONAL SERVICES RENDERED

01/18/19	JLK	Continue researching Americans with Disabilities Act-related issues; confer with insurance representatives regarding same; continue preparing model agreement for district dissemination.	0.10 hrs
01/21/19	MCE	Research potential write-off regarding accounts receivable.	3.90 hrs
01/22/19	SRS	Research special assessment lien termination and enforceability.	2.30 hrs
01/23/19	SRS	Research special assessment lien termination and enforceability.	2.60 hrs
01/25/19	JLK	Research and prepare updated rules of procedure; research and update FEMA procurement documents regarding debris removal services.	0.10 hrs
01/29/19	MCE	Research accounts receivable and final lift history.	0.40 hrs
01/29/19	SRS	Prepare for and attend conference call regarding assessments.	0.40 hrs
01/30/19	MCE	Research accounts receivable issue; prepare for and attend conference call with Brizendine.	0.60 hrs

Total fees for this matter $2,867.50

DISBURSEMENTS

Federal Express	25.90
Lexis Nexis	42.31
Total disbursements for this matter	$68.21

MATTER SUMMARY

Kilinski, Jennifer L.	0.20 hrs	250 /hr	$50.00
Eckert, Michael C.	4.90 hrs	310 /hr	$1,519.00
Sandy, Sarah R.	5.30 hrs	245 /hr	$1,298.50
TOTAL FEES			$2,867.50

TOTAL DISBURSEMENTS	$68.21
TOTAL CHARGES FOR THIS MATTER	**$2,935.71**

BILLING SUMMARY

Kilinski, Jennifer L.	0.20 hrs	250 /hr	$50.00
Eckert, Michael C.	4.90 hrs	310 /hr	$1,519.00
Sandy, Sarah R.	5.30 hrs	245 /hr	$1,298.50

TOTAL FEES	$2,867.50
TOTAL DISBURSEMENTS	$68.21
TOTAL CHARGES FOR THIS BILL	**$2,935.71**

Please include the bill number on your check.

RECEIVED
FEB 1 8 2019

ate rice & Mazzella & co., llc
/M approval Belinda Blandon Date 2/26/19
ate entered FEB 2 2 2019
und DOI GL 51400 OC 3107
heck #

Johnson Engineering, Inc.
Remit To:
P.O. Box 2112
Fort Myers, FL 33902
Ph: 239.334.0046 Fax: 239.334.3661

Invoice

Date Rec'd Rizzetta & Co, Inc
D/M approval Belinda Blandon Date 2/4/19

Project Manager Andrew Tilton

January 22, 2019
Project No: 20044888-001
Invoice No: 133

FEID #59-1173834

Accounts Payable
CFM CDD
c/o Rizzetta & Company, Inc
9530 Marketplace Road, Suite 206
Fort Myers, FL 33912

Date entered JAN 31 2019
Fund 001 GL 51300 OC 3103
Check #

RECEIVED
JAN 25 2019

Project 20044888-001 CFM CDD General Engineering

Professional Services through January 13, 2019

Phase 01 General Engineering

Professional Personnel

		Hours	Rate	Amount
Principal GIS Consultant				
Lohr, Michael	12/13/2018	.50	170.00	85.00
Review drainage issues Chestnet Ln w/ D Robson				
Lohr, Michael	12/18/2018	2.00	170.00	340.00
Updating OPwnership mapping for D Robson				
Lohr, Michael	12/19/2018	1.00	170.00	170.00
Updates to Ownership mapping, revisions per D Robson and prints for meeting				
GIS Consultant III				
Lohr, Paul	1/9/2019	1.25	135.00	168.75
CFM CDD. Working on adjustments to layers in CFM CDD base map based on conservation easements CAD file from Mark Haines. E-mail message to Mark Haines about CE 19 possibly being on the wrong layer. Requested by Mike Lohr.				
Lohr, Paul	1/9/2019	2.00	135.00	270.00
CFM CDD. Working on adjustments to layers in CFM CDD base map based on conservation easements CAD file from Mark Haines. Requested by Mike Lohr.				
Professional Surveyor & Mapper IV				
Haines, Mark	12/19/2018	1.00	150.00	150.00
Research and provide information regarding conservation easements.				
Ecologist I				
Thomas, Gregory	12/10/2018	2.00	100.00	200.00
Last edits from AGN for Time Zero report				
Thomas, Gregory	12/11/2018	4.00	100.00	400.00
Final edits to report; submittal to SFWMD				
Ecologist III				
Nychyk, Andrew	12/10/2018	2.00	130.00	260.00
Review Mag Landing TZ monitoring report				
Principal Ecologist				
Herrero, Laura	12/13/2018	2.25	170.00	382.50
Final review of Time Zero monitoring report; coordination with SFWMD regarding notice of monitoring; coordination regarding Earth Balance work				

Technician II				
Keen, Cynthia	12/13/2018	.75	65.00	48.75
CFM CDD 12/20/18 Agenda package review, email to D Robson for meeting prep; Magnolia Landing Additional Parcels Overdue Monitoring email from SFWMD, M Skinner, forwarded to D Robson, A Tilton, L Herrera for review/response; forward CFM CDD Conservation exhibit to D Robson				
Keen, Cynthia	12/17/2018	.50	65.00	32.50
SFWMD - Marie Dessources email re maintenance event for southern branches of flowway, Permit 36-01396-S-04, Magnolia Landing reviewed, research area described (parcels determined not to be a part of CE), forwarded to Belinda Blandon, Andy Tilton, David Robson, Brent Burford for review and comments. Respond to Marie Dessources, Laura Layman to change point of contact from Mallory Clancy to Andy Tilton				
Keen, Cynthia	12/26/2018	.50	65.00	32.50
Magnolia FGUA turnover				
Keen, Cynthia	12/28/2018	.50	65.00	32.50
Magnolia FGUA turnover				
Keen, Cynthia	1/3/2019	1.00	65.00	65.00
20601 Dennisport Lane research parcel for treatment determination, discuss findings w/A Tilton				
Keen, Cynthia	1/9/2019	.50	65.00	32.50
LCEC - D Wilson, cost estimate for decorative lighting at entrance of Magnolia Landing				
Engineer Intern III				
Burford, Brent	12/20/2018	1.50	115.00	172.50
Site inspection as requested by district manager.				
Burford, Brent	12/20/2018	2.00	115.00	230.00
Attended CFM CDD monthly meeting.				
Burford, Brent	1/12/2019	.50	115.00	57.50
Updated 2nd Lift Asphalt Exhibit to include street names, and emailed to the CDD Manager.				
Engineer VIII				
Robson, David	12/13/2018	1.00	170.00	170.00
Ownership map and Chestnut drainage issues review with District Manager.				
Robson, David	12/19/2018	1.50	170.00	255.00
Prepare responses to resident comments sent by District Manager.				
Robson, David	12/19/2018	1.00	170.00	170.00
Review dradt owenership map and update per Land Swap recorded document.				
Robson, David	12/20/2018	2.00	170.00	340.00
Attend Board of Supervisors meeting.				
Robson, David	12/20/2018	1.50	170.00	255.00
Field review of paving and sidewalk resident issues for discusson at Board of Supervisors meeting.				
Engineer IX				
Tilton, Andrew	12/10/2018	1.00	190.00	190.00
Review emails and photographs of Chestnut Ridge Drive area				
Tilton, Andrew	12/12/2018	.50	190.00	95.00
Discussion on drainage conditions.				
Tilton, Andrew	12/13/2018	.50	190.00	95.00
Emails on Chestnut Ridge Drive drainage				

Tilton, Andrew	12/14/2018	1.50	190.00	285.00	
Draft response to Chestnut Ridge Drive and Redstone Circle drainage with excerpts from plans and send to team for review. Telephone conversation with Belinda Blandon.					
Tilton, Andrew	12/17/2018	.50	190.00	95.00	
Drainage issues					
Tilton, Andrew	1/11/2019	.50	190.00	95.00	
Road exhibit requested by Belinda					
Technician II					
Marino, Brian	12/11/2018	.25	65.00	16.25	
Redstone Cirle drainage plans					
Totals		37.50		5,191.25	
Total Labor					**5,191.25**
				Total this Phase	**$5,191.25**

Phase REIM Reimbursables

Reimbursable Expenses

Project Expenses Reimbursable

12/17/2018	Tropical Hardware	PVC pipe	19.18	
	Total Reimbursables		**19.18**	**19.18**
			Total this Phase	**$19.18**
			Total this Invoice	**$5,210.43**

Outstanding Invoices

Number	Date	Balance
132	12/13/2018	6,104.15
Total		**6,104.15**

LCEC
PEOPLE. POWER. POSSIBILITIES.

Visit us online at www.lcec.net
Phone: (239) 656-2300
Toll Free: 1-800-599-2356

CFM COMMUNITY DEVELOPMENT DISTRICT

Account # 6571809552

Billing Date:	01/24/2019
Current Bill Due Date:	02/14/2019
Previous Balance	$1,678.98
Payment - 01/09/19	-$1,678.98
Current Charges Due 02/14/19	**$1,678.98**

Important Messages

New year, new savings! Visit LCEC SmartHub and become an energy expert!

Total Amount Due
$1,678.98
Due Date: 02/14/19

RECEIVED
JAN 3 1 2019

Service Address: MAGNOLIA LANDING LN & PARK, NORTH FORT MYERS, 33917
Service Location: 1000085908

Service Dates: 12/17/18 - 01/21/19

Date Rec'd Rizzetta & Co, Inc_____
D/M approval Belinda Blandon Date 2/4/19
Date entered JAN 3 1 2019
Fund 001 GL 53100 OC 4307

Current Service Detail

Light Energy Charge		$6.74
150 watt HPS		$14.17
13' Decorative Pole		$12.75
Power Cost Adjustment	69 kWh @ 0.00630	$0.43
Franchise Fee Lee County		$1.61
Gross Receipts Tax		$0.22
Total Current Charges for this Location		**$35.92**

Service Address: MAGNOLIA LANDING LN & PARK, NORTH FORT MYERS, 33917
Service Location: 1000085909

Check #

Service Dates: 12/17/18 - 01/21/19

Current Service Detail

Light Energy Charge		$6.74
150 watt HPS		$14.17
13' Decorative Pole		$12.75
Power Cost Adjustment	69 kWh @ 0.00630	$0.43
Franchise Fee Lee County		$1.61
Gross Receipts Tax		$0.22
Total Current Charges for this Location		**$35.92**

KEEP
SEND

LCEC
PEOPLE. POWER. POSSIBILITIES.

Post Office Box 3455
North Fort Myers,
FL 33918-3455

Account Number	6571809552
Current Charges Due 02/14/19	$1,678.98
Total Amount Due	$1,678.98

Checks must be in U.S. funds and drawn on a U.S. bank.

PAY YOUR BILL 24/7
ONLINE: Check or credit/debit card at www.lcec.net or download the mobile app.
PHONE: (239) 656-2300 or (800) 599-2356

VISA MasterCard DISCOVER AMERICAN EXPRESS

3 1

CFM COMMUNITY DEVELOPMENT DISTRICT
CFM COMMUNITY DEVELOPMENT DISTRICT
9530 MARKETPLACE RD STE 206
FORT MYERS FL 33912-0393

LCEC
PO BOX 31477
TAMPA, FL 33631-3477

19

110136571809552000000000000016789800016789801242019 2

Service Address: 3501 AVENIDA DEL VERA BLVD, NORTH FORT MYERS, 33917
Service Location: 1000091001

Service Dates: 12/17/18 - 01/21/19

Current Service Detail		
Light Energy Charge		$1.92
100 watt LED		$9.13
Power Cost Adjustment	20 kWh @ 0.00630	$0.13
Franchise Fee Lee County		$0.53
Gross Receipts Tax		$0.07
Total Current Charges for this Location		**$11.78**

Service Address: 3501 AVENIDA DEL VERA BLVD, NORTH FORT MYERS, 33917
Service Location: 1000091002

Service Dates: 12/17/18 - 01/21/19

Current Service Detail		
Light Energy Charge		$1.92
100 watt LED		$9.13
Power Cost Adjustment	20 kWh @ 0.00630	$0.13
Franchise Fee Lee County		$0.53
Gross Receipts Tax		$0.07
Total Current Charges for this Location		**$11.78**

Service Address: MAGNOLIA LANDING LN, NORTH FORT MYERS, 33917
Service Location: 1000111790

Service Dates: 12/17/18 - 01/21/19

Current Service Detail		
Light Energy Charge		$6.74
150 watt HPS		$14.17
13' Decorative Pole		$12.75
Power Cost Adjustment	69 kWh @ 0.00630	$0.43
Franchise Fee Lee County		$1.61
Gross Receipts Tax		$0.22
Total Current Charges for this Location		**$35.92**

Service Address: MAGNOLIA LANDING LN, NORTH FORT MYERS, 33917
Service Location: 1000111791

Service Dates: 12/17/18 - 01/21/19

Current Service Detail		
Light Energy Charge		$6.74
150 watt HPS		$14.17
13' Decorative Pole		$12.75
Power Cost Adjustment	69 kWh @ 0.00630	$0.43
Franchise Fee Lee County		$1.61
Gross Receipts Tax		$0.22
Total Current Charges for this Location		**$35.92**

Service Address: MAGNOLIA LANDING LN, NORTH FORT MYERS, 33917
Service Location: 1000111792

Service Dates: 12/17/18 - 01/21/19

Current Service Detail		
Light Energy Charge		$6.74
150 watt HPS		$14.17
13' Decorative Pole		$12.75
Power Cost Adjustment	69 kWh @ 0.00630	$0.43
Franchise Fee Lee County		$1.61
Gross Receipts Tax		$0.22
Total Current Charges for this Location		**$35.92**

Service Address: 3000 MAGNOLIA LANDING LN, NORTH FORT MYERS, 33917
Service Location: 1000170338

Service Dates: 12/17/18 - 01/21/19

Current Service Detail		
Light Energy Charge		$6.74
150 watt HPS		$14.17
13' Decorative Pole		$12.75
Power Cost Adjustment	69 kWh @ 0.00630	$0.43
Franchise Fee Lee County		$1.61
Gross Receipts Tax		$0.22
Total Current Charges for this Location		**$35.92**

Service Address: 3000 MAGNOLIA LANDING LN, NORTH FORT MYERS, 33917
Service Location: 1000170339

Service Dates: 12/17/18 - 01/21/19

Current Service Detail		
Light Energy Charge		$6.74
150 watt HPS		$14.17
13' Decorative Pole		$12.75
Power Cost Adjustment	69 kWh @ 0.00630	$0.43
Franchise Fee Lee County		$1.61
Gross Receipts Tax		$0.22
Total Current Charges for this Location		**$35.92**

Service Address: 3000 MAGNOLIA LANDING LN, NORTH FORT MYERS, 33917
Service Location: 1000170340

Service Dates: 12/17/18 - 01/21/19

Current Service Detail		
Light Energy Charge		$6.74
150 watt HPS		$14.17
13' Decorative Pole		$12.75
Power Cost Adjustment	69 kWh @ 0.00630	$0.43
Franchise Fee Lee County		$1.61
Gross Receipts Tax		$0.22
Total Current Charges for this Location		**$35.92**

Service Address: 3000 MAGNOLIA LANDING LN, NORTH FORT MYERS, 33917
Service Location: 1000170341

Service Dates: 12/17/18 - 01/21/19

Current Service Detail		
Light Energy Charge		$6.74
150 watt HPS		$14.17
13' Decorative Pole		$12.75
Power Cost Adjustment	69 kWh @ 0.00630	$0.43
Franchise Fee Lee County		$1.61
Gross Receipts Tax		$0.22
Total Current Charges for this Location		**$35.92**

Service Address: 3000 MAGNOLIA LANDING LN, NORTH FORT MYERS, 33917
Service Location: 1000170342

Service Dates: 12/17/18 - 01/21/19

Current Service Detail		
Light Energy Charge		$6.74
150 watt HPS		$14.17
13' Decorative Pole		$12.75
Power Cost Adjustment	69 kWh @ 0.00630	$0.43
Franchise Fee Lee County		$1.61
Gross Receipts Tax		$0.22
Total Current Charges for this Location		**$35.92**

ervice Address: 3501 AVENIDA DEL VERA BLVD # LIGHTS, NORTH FORT MYERS, 33917
ervice Location: 1000240195

Service Dates: 12/17/18 - 01/21/19

Current Service Detail		
Light Energy Charge		$6.74
150 watt HPS		$14.17
13' Decorative Pole		$12.75
Power Cost Adjustment	69 kWh @ 0.00630	$0.43
Franchise Fee Lee County		$1.61
Gross Receipts Tax		$0.22
Total Current Charges for this Location		**$35.92**

ervice Address: 3501 AVENIDA DEL VERA BLVD # LIGHTS, NORTH FORT MYERS, 33917
ervice Location: 1000240196

Service Dates: 12/17/18 - 01/21/19

Current Service Detail		
Light Energy Charge		$6.74
150 watt HPS		$14.17
13' Decorative Pole		$12.75
Power Cost Adjustment	69 kWh @ 0.00630	$0.43
Franchise Fee Lee County		$1.61
Gross Receipts Tax		$0.22
Total Current Charges for this Location		**$35.92**

ervice Address: 3501 AVENIDA DEL VERA BLVD # LIGHTS, NORTH FORT MYERS, 33917
ervice Location: 1000240197

Service Dates: 12/17/18 - 01/21/19

Current Service Detail		
Light Energy Charge		$6.74
150 watt HPS		$14.17
13' Decorative Pole		$12.75
Power Cost Adjustment	69 kWh @ 0.00630	$0.43
Franchise Fee Lee County		$1.61
Gross Receipts Tax		$0.22
Total Current Charges for this Location		**$35.92**

ervice Address: 3501 AVENIDA DEL VERA BLVD # LIGHTS, NORTH FORT MYERS, 33917
ervice Location: 1000240198

Service Dates: 12/17/18 - 01/21/19

Current Service Detail		
Light Energy Charge		$6.74
150 watt HPS		$14.17
13' Decorative Pole		$12.75
Power Cost Adjustment	69 kWh @ 0.00630	$0.43
Franchise Fee Lee County		$1.61
Gross Receipts Tax		$0.22
Total Current Charges for this Location		**$35.92**

ervice Address: 3501 AVENIDA DEL VERA BLVD # LIGHTS, NORTH FORT MYERS, 33917
ervice Location: 1000240199

Service Dates: 12/17/18 - 01/21/19

Current Service Detail		
Light Energy Charge		$6.74
150 watt HPS		$14.17
13' Decorative Pole		$12.75
Power Cost Adjustment	69 kWh @ 0.00630	$0.43
Franchise Fee Lee County		$1.61
Gross Receipts Tax		$0.22
Total Current Charges for this Location		**$35.92**

Service Address: 3501 AVENIDA DEL VERA BLVD # LIGHTS, NORTH FORT MYERS, 33917
Service Location: 1000240205

Service Dates: 12/17/18 - 01/21/19

Current Service Detail

Light Energy Charge		$6.74
150 watt HPS		$14.17
13' Decorative Pole		$12.75
Power Cost Adjustment	69 kWh @ 0.00630	$0.43
Franchise Fee Lee County		$1.61
Gross Receipts Tax		$0.22
Total Current Charges for this Location		**$35.92**

Service Address: 3501 AVENIDA DEL VERA BLVD # LIGHTS, NORTH FORT MYERS, 33917
Service Location: 1000240206

Service Dates: 12/17/18 - 01/21/19

Current Service Detail

Light Energy Charge		$6.74
150 watt HPS		$14.17
13' Decorative Pole		$12.75
Power Cost Adjustment	69 kWh @ 0.00630	$0.43
Franchise Fee Lee County		$1.61
Gross Receipts Tax		$0.22
Total Current Charges for this Location		**$35.92**

Service Address: 3501 AVENIDA DEL VERA BLVD # LIGHTS, NORTH FORT MYERS, 33917
Service Location: 1000240207

Service Dates: 12/17/18 - 01/21/19

Current Service Detail

Light Energy Charge		$6.74
150 watt HPS		$14.17
13' Decorative Pole		$12.75
Power Cost Adjustment	69 kWh @ 0.00630	$0.43
Franchise Fee Lee County		$1.61
Gross Receipts Tax		$0.22
Total Current Charges for this Location		**$35.92**

Service Address: 3501 AVENIDA DEL VERA BLVD # LIGHTS, NORTH FORT MYERS, 33917
Service Location: 1000240208

Service Dates: 12/17/18 - 01/21/19

Current Service Detail

Light Energy Charge		$6.74
150 watt HPS		$14.17
13' Decorative Pole		$12.75
Power Cost Adjustment	69 kWh @ 0.00630	$0.43
Franchise Fee Lee County		$1.61
Gross Receipts Tax		$0.22
Total Current Charges for this Location		**$35.92**

Service Address: 3501 AVENIDA DEL VERA BLVD # LIGHTS, NORTH FORT MYERS, 33917
Service Location: 1000240209

Service Dates: 12/17/18 - 01/21/19

Current Service Detail

Light Energy Charge		$6.74
150 watt HPS		$14.17
13' Decorative Pole		$12.75
Power Cost Adjustment	69 kWh @ 0.00630	$0.43
Franchise Fee Lee County		$1.61
Gross Receipts Tax		$0.22
Total Current Charges for this Location		**$35.92**

Service Address: 3501 AVENIDA DEL VERA BLVD # LIGHTS, NORTH FORT MYERS, 33917
Service Location: 1000240215

Service Dates: 12/17/18 - 01/21/19

Current Service Detail		
Light Energy Charge		$6.74
150 watt HPS		$14.17
13' Decorative Pole		$12.75
Power Cost Adjustment	69 kWh @ 0.00630	$0.43
Franchise Fee Lee County		$1.61
Gross Receipts Tax		$0.22
Total Current Charges for this Location		**$35.92**

Service Address: 3501 AVENIDA DEL VERA BLVD # LIGHTS, NORTH FORT MYERS, 33917
Service Location: 1000240216

Service Dates: 12/17/18 - 01/21/19

Current Service Detail		
Light Energy Charge		$6.74
150 watt HPS		$14.17
13' Decorative Pole		$12.75
Power Cost Adjustment	69 kWh @ 0.00630	$0.43
Franchise Fee Lee County		$1.61
Gross Receipts Tax		$0.22
Total Current Charges for this Location		**$35.92**

Service Address: 3501 AVENIDA DEL VERA BLVD # LIGHTS, NORTH FORT MYERS, 33917
Service Location: 1000240217

Service Dates: 12/17/18 - 01/21/19

Current Service Detail		
Light Energy Charge		$6.74
150 watt HPS		$14.17
13' Decorative Pole		$12.75
Power Cost Adjustment	69 kWh @ 0.00630	$0.43
Franchise Fee Lee County		$1.61
Gross Receipts Tax		$0.22
Total Current Charges for this Location		**$35.92**

Service Address: 3501 AVENIDA DEL VERA BLVD # LIGHTS, NORTH FORT MYERS, 33917
Service Location: 1000240218

Service Dates: 12/17/18 - 01/21/19

Current Service Detail		
Light Energy Charge		$6.74
150 watt HPS		$14.17
13' Decorative Pole		$12.75
Power Cost Adjustment	69 kWh @ 0.00630	$0.43
Franchise Fee Lee County		$1.61
Gross Receipts Tax		$0.22
Total Current Charges for this Location		**$35.92**

Service Address: 3501 AVENIDA DEL VERA BLVD # LIGHTS, NORTH FORT MYERS, 33917
Service Location: 1000240219

Service Dates: 12/17/18 - 01/21/19

Current Service Detail		
Light Energy Charge		$6.74
150 watt HPS		$14.17
13' Decorative Pole		$12.75
Power Cost Adjustment	69 kWh @ 0.00630	$0.43
Franchise Fee Lee County		$1.61
Gross Receipts Tax		$0.22
Total Current Charges for this Location		**$35.92**

Lee County Electric Cooperative, Inc.
Post Office Box 3455
North Fort Myers, FL 33918-3455
(239) 656-2300 • Fax (239) 995-4287
www.lcec.net

01/24/2019

Dear valued customer:

As you know, voters in your county recently approved the adoption of a local governmental surtax beginning January 1, 2019. The surtax is combined with the local sales tax that LCEC must collect and remit to the Department of Revenue each month. You will notice the tax indicated separately on your LCEC bill. Customers will be assessed the surtax that applies only to the county in which their electric account is located. LCEC is proud that we have not raised electric rates in more than 10 years and we will continue to focus on providing reliable power and quality service at competitive rates.

Following are the voter-approved surtaxes for your respective county:

Lee County
NEW 0.5% School Capital Outlay Surtax – Lee County Resolution; Sections 212.054 and 212.055, Florida Statutes. The surtax will remain in effect until December 31, 2028. The combined state and local sales and use tax rate for Lee County will be 6.5%.

Collier County
NEW 1% Local Government Infrastructure Surtax – Collier County Ordinance No. 2018-21; Sections 212.054 and 212.055, Florida Statutes. The surtax will remain in effect until December 31, 2025. The combined state and local sales and use tax rate for Collier County will be 7%.

Broward County
NEW 1% Charter County and Regional Transportation System Surtax – Broward County Ordinance No. 2018-29; Sections 212.054 and 212.055, Florida Statutes. The surtax will remain in effect until December 31, 2048. The combined state and local sales and use tax rate for Broward County will be 7%.

Charlotte County
Current 1% Local Government Infrastructure Surtax – Charlotte County Ordinance No. 2014-20; Sections 212.054 and 212.055, Florida Statutes. The surtax will remain in effect until December 31, 2020. The combined state and local sales and use tax rate for Charlotte County is 7%.

Hendry County
Current 1% Surtax – Hendry County Ordinance No. 2002-32; Sections 212.054 and 212.055, Florida Statutes. The surtax will remain in effect until further notice. The combined state and local sales and use tax rate for Hendry County is 7%.

If you have questions about the surtax in your county, please visit floridarevenue.com or call Taxpayer Services at 850-488-6800. For questions about your electric bill, please call LCEC at 239-656-2300 or toll-free 800-599-2356.

Sincerely,

LCEC

Magnolia Landing Master Association, Inc.

RECEIVED
FEB 21 2019

INVOICE

14914 Winding Creek Court
Tampa, FL 33613
Phone 813.374.2363 Fax 813.374.2362

DATE: January 1, 2019
INVOICE # 349
FOR: *Landscape Maintenance*

Bill To:

CFM CDD
9530 Marketplace Road, Suite 206
Fort Myers, FL 33912
Phone: (239) 936-0913 Fax: (239) 936-1815

DESCRIPTION	AMOUNT
CDD Landscape Maintenance - January 2019	$ 3,494.58
TOTAL	$ 3,494.58

Date Rec'd Rizzetta & Co, Inc_____
D/M approval Belinda Blandon Date 2/26/19
Date entered FEB 21 2019
Fund 001 GL 53900 OC 41604
Check #_____

Make all checks payable to **Magnolia Landing Master Association Inc.**

THANK YOU FOR YOUR BUSINESS!

Rizzetta & Company, Inc.
3434 Colwell Avenue
Suite 200
Tampa FL 33614

Invoice

Date	Invoice #
2/1/2019	INV0000038003

RECEIVED
JAN 24 2019

Bill To:

CFM CDD
3434 Colwell Avenue, Suite 200
Tampa FL 33614

Services for the month of	Terms	Client Number
February	Upon Receipt	00545

Description	Qty	Rate	Amount
District Management Services 3101	1.00	$1,416.67	$1,416.67
Administrative Services 3100	1.00	$450.00	$450.00
Accounting Services 3201	1.00	$1,420.00	$1,420.00
Financial & Revenue Collections 3111	1.00	$416.67	$416.67

Date Rec'd Rizzetta & Co, Inc_____
D/M approval Belinda Blandon Date 2/4/19
Date entered JAN 31 2019
Fund 001 GL 51300 OC _____
Check #_____

Subtotal	$3,703.34
Total	$3,703.34

Rizzetta Technology Services
3434 Colwell Avenue
Suite 200
Tampa FL 33614

Invoice

Date	Invoice #
2/1/2019	INV0000004110

Bill To:

CFM CDD
3434 Colwell Avenue, Suite 200
Tampa FL 33614

Services for the month of	Terms	Client Number
February		00545

Description	Qty	Rate	Amount
EMail Hosting	5	$15.00	$75.00
Website Hosting Services	1	$100.00	$100.00

Date Rec'd Rizzetta & Co, Inc_____
D/M approval Belinda Blandon Date 2/4/19
Date entered JAN 31 2019
Fund 001 GL 51300 OC 5103
Check #_____

Subtotal	$175.00
Total	$175.00

Classified/Legal Advertising Invoice

The Breeze Legals

2510 DEL PRADO BLVD.

CAPE CORAL, FL
33904
(239) 574-1110

CFM/CDD
12750 CITRUS PARK LANE
SUITE 115
TAMPA, FL

02/12/2019 10:29:34AM

33625

No: 112981

Phone: 239 936-0913

Ad No	Customer No:	Start Date	Stop Date	Category:	Classification:
112981	**L03434**	**02-13-2019**	**02-13-2019**	**Legals**	**MISCELLANEOUS**

Order No	Rate:	Lines:	Words:	Inches:		Cost	Payments	Balance
	LA	**107**	**360**	**10.40**		**53.50**	**.00**	**53.50**

Publications ... Runs	Solicitor:	Origin:	Sales Rep:	Credit Card	Credit Card Number	Card Expire
Breeze Legals ... 1 **Online Legals ... 1**	**SM**	**17**	**3**			

Identifier

NOTICE OF PUBLIC MEETING
CFM COMMUNITY DEVELOPMENT DISTRICT

The Board of Supervisors of the CFM Community

RECEIVED
FEB 18 2019

Date rec'd Mizzetta & Co., Inc.
D/M approval Belinda Blandon Date 2/26/19
Date entered FEB 21 2019
Fund 001 GL 51300 OC 4801
Check #

*=Extend Expiration Date

CAPE CORAL BREEZE
PUBLISHED CAPE CORAL, FLA

Affidavit of Publication

State of Florida
County of Lee
Before the undersigned authority personally appeared Jay Hill, who on oath says that he/she is the ADVERTISING REPRESENTATIVE of the Cape Coral Breeze newspaper, published at Cape Coral, Lee County, Florida that the attached copy of advertisement, being a Legal Notice, in the matter of Notice of Public Meeting CFM Community Development District, as published in said newspaper in the issues of February 13, 2019. Affiant further says that the Cape Coral Breeze is a newspaper published at Cape Coral, said Lee County, Florida and that the said newspaper has heretofore been continuously published in said Lee County, Florida, and has been entered as a second class periodicals matter at the post office in Fort Myers in said Lee County, Florida for a period of one year preceding the first publication of the attached copy of advertisement; and affiant further says that he has neither paid nor promised any person, firm or corporation any discount, rebate, commission or refund for the purpose of securing this advertisement for publication in the said Newspaper.

SWORN TO AND SUBSCRIBED before me this
February 13, 2019
Notary Public

112981

SUSAN M. DATO
Notary Public - State of Florida
Commission # GG 286101
My Comm. Expires Jan 21, 2023
Bonded through National Notary Assn.

NOTICE OF PUBLIC MEETING CFM COMMUNITY DEVELOPMENT DISTRICT

The Board of Supervisors of the CFM Community Development District ("District") will hold a regular meeting on Thursday, February 21, 2019, at 11:30 a.m. at the office of Rizzetta & Company, Inc., located at 9530 Marketplace Road, Suite 206, Fort Myers, Florida 33912. A copy of the agenda for the meeting can be obtained from the District Office at 9530 Marketplace Road, Suite 206, Fort Myers, Florida 33912 or by phone at (239) 936-0913. Additionally, a copy of the agenda, along with any meeting materials available in an electronic format, may be obtained at www.cfmcdd.org. Items on the agenda may include, but are not limited to, District operations and maintenance activities, financial matters, capital improvements, and general administration activities.

The meeting is open to the public and will be conducted in accordance with the provisions of Florida law. There may be occasions when one or more Board Supervisors or staff members will participate by telephone. A speaker telephone will be present at the above location so that any Board Supervisor or staff member can attend the meeting by telephone and be fully informed of the discussions taking place either in person or by telephone communication. The meeting may be continued in progress without additional notice to a time, date, and location stated on the record.

Pursuant to provisions of the Americans with Disabilities Act, any person requiring special accommodations to participate in this meeting is asked to advise the District Office at (239) 936-0913, at least 48 hours before the meetings. If you are hearing or speech impaired, please contact the Florida Relay Service by dialing 7-1-1, or 1-800-955-8771 (TTY) / 1-800-955-8770 (Voice), for aid in contacting the District Office.

A person who decides to appeal any decision made by the Board with respect to any matter considered at the meeting is advised that the person will need a record of the proceedings and that, accordingly, the person may need to ensure that a verbatim record of the proceedings is made, including the testimony and evidence upon which the appeal is based.

Belinda Blandon
District Manager

Run Date: 02/13/2019
112981

Tab 3

Proposal

Suntech Electrical Contractors, Inc.
75 Mid CapeTerrace Unit #4
Cape Coral, FL 33991
(239) 772-7177 Fax (239) 772-4482

Proposal Submitted to	Phone	Date
Rizzetta and Company	239-936-0913	2-28-19
Address: 9530 Marketplace Road, suite 206	Job Name: LCEC conduits	
City, State, Zip: Ft. Myers, FL 33912	Job Location: Magnolia Landings, N. Ft. Myers, FL	
Contact: Belinda Blandon	Date of Plans:	Fax:

Supply and install underground conduits for 12 new LCEC installed light poles.
Approximately 900ft of underground trenching and conduit

Excavation ---------- $575.00
Labor ----------$2,080.00
Material cost ---------- $975.00

Total Proposal: $3,630.00

We propose:hereby to furnish material and labor - complete in accordance with above specifications, for the sum of : ($). Payment to be made as follows: Net 30 days All material is guaranteed to be as specified. All work to be completed in a workmanlike manner according to standard practices. Any alteration or deviation from above specifications involving extra costs will be executed only upon written orders, and will become an extra charge over and above the estimate. All agreements contingent upon strikes, accidents or delays beyond our control. Owner to carry fire, tornado and other necessary insurance. Our workers are fully covered by Workman's Compensation Insurance.

Authorized Signature_____
Proposed by: Gary Czajkowski Note: This Proposal may be withdrawn by us if not accepted within **30** days.

Acceptance of Proposal: The above prices, specifications and conditions are satisfactory and are hereby accepted. You are authorized to do the work as specified. Payment will be made as outlined above.

Signature_____ Date of Acceptance_____

Proposal

Suntech Electrical Contractors, Inc.
75 Mid CapeTerrace Unit #4
Cape Coral, FL 33991
(239) 772-7177 Fax (239) 772-4482

Proposal Submitted to	Phone	Date
Rizzetta and Company	239-936-0913	2-28-19
Address: 9530 Marketplace Road, suite 206	Job Name: Monument sign lighting upgrades	
City, State, Zip: Ft. Myers, FL 33912	Job Location: Magnolia Landings, N. Ft. Myers, FL	
Contact: Belinda Blandon	Date of Plans	Fax

Supply and install high lumen output LED flood lighting on monument sign and up lighting on trees.

Fixtures
4 – 72 Watt LEDs (equivalent to 250 watt metal halide) on sign
12 -35 Wat LEDs (equivalent to 100 watt metal halides) up lighting on trees
Fixture cost ----------$2358.00
Labor ----------$1,920.00
Material: wire,photo cell, misc hardware and fittings ----------$165.00

Total Proposal: $4,443.00

We propose:hereby to furnish material and labor - complete in accordance with above specifications, for the sum of : ($). Payment to be made as follows: Net 30 days All material is guaranteed to be as specified. All work to be completed in a workmanlike manner according to standard practices. Any alteration or deviation from above specifications involving extra costs will be executed only upon written orders, and will become an extra charge over and above the estimate. All agreements contingent upon strikes, accidents or delays beyond our control. Owner to carry fire, tornado and other necessary insurance. Our workers are fully covered by Workman's Compensation Insurance.

Authorized Signature_____
Proposed by: Gary Czajkowski Note: This Proposal may be withdrawn by us if not accepted within **30** days.

Acceptance of Proposal: The above prices, specifications and conditions are satisfactory and are hereby accepted. You are authorized to do the work as specified. Payment will be made as outlined above.

Signature_____ Date of Acceptance_____

FLOOD & AREA

E-GL5 Series

Premium LED Directional Floodlight - Large
Replaces 250W MH

Wide

Medium

Sleek, energy - efficient design.

Efficient
- Uses 75% less energy than 250W MH

Versatile
- Wide (100°) and Medium (50°) distribution patterns for a variety of applications

Recommended Use
- Building facades
- Security
- Architectural landscaping
- Highlighting signs & displays

Input Voltage
- Universal (120V through 277V Operation)

Certifications

5 YEAR WARRANTY · WET LOCATION SUITABLE · UL LISTED · NON-DIMMABLE · DLC QPL LISTED · CREE LEDs

WARNING: Cancer and Reproductive Harm - www.p65warnings.ca.gov

e-conolight® | Quality Products, Affordably Priced.

1501 96th Street, Sturtevant, WI 53177 | Phone (888) 243-9445 | Fax (262) 504-5409 | www.e-conolight.com

FLOOD & AREA

E-GL5 Series - Large

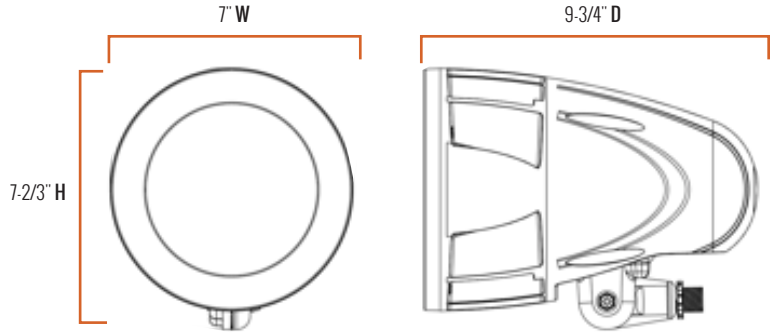

Series Overview

DIMENSIONS	PRODUCT WEIGHT	MOUNTING HEIGHT	SPACING
9-3/4" **D** x 7" **W** x 7-2/3" **H*** *Height dimension includes fitter	7.4 lbs.	---	---

Fixture Specifications

HOUSING	Low-copper, die-cast aluminum housing and lens frame Dark bronze polyester powder-coat finish
LENS ASSEMBLY	Tempered glass lens is thermal, shock and impact resistant
MOUNTING	1/2" NPS aluminum die-cast adjustable fitter attaches to standard junction box cover with 1/2" threaded coupling

Electrical Performance

OPERATING MINIMUM	LIFESPAN L_{70} AT 25°C (77°F)	POWER FACTOR	TOTAL HARMONIC DISTORTION	DIMMABLE
-40°C (-40°F)	Estimated >100,000 Hours	› 0.9	‹ 20%	No

INPUT VOLTAGE	120V	208V	240V	277V
Current Draw (Amps)	0.60A	0.34A	0.30A	0.26A

Warranty & Certifications

WARRANTY	UL LISTED	DLC	ENERGY STAR
5-Year Limited	Wet Locations	Yes	---

CORRELATED COLOR TEMPERATURE (CCT)

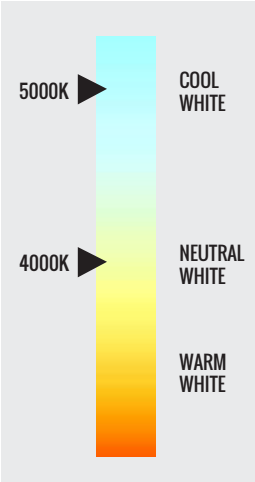

Output Specifications

SKU	LIGHT OUTPUT	COLOR TEMP (See chart)	POWER CONSUMPTION	COLOR ACCURACY	DISTRIBUTION	REPLACES
E-GL5MFL07C2Z	7800 Lumens	Cool White (5000K)	72W	≥ 70 CRI	50° Flood	250W MH
E-GL5MFL07N2Z	7800 Lumens	Neutral White (4000K)	72W	≥ 70 CRI	50° Flood	250W MH
E-GL5WFL07C2Z	7000 Lumens	Cool White (5000K)	72W	≥ 70 CRI	100° Flood	250W MH
E-GL5WFL07N2Z	6900 Lumens	Neutral White (4000K)	72W	≥ 70 CRI	100° Flood	250W MH

Due to continuous product improvement, information in this document is subject to change.

Revision Date: 01/22/19

1501 96th Street, Sturtevant, WI 53177 | Phone (888) 243-9445 | Fax (262) 504-5409 | www.e-conolight.com

e-conolight®

E-GL5 Series - Large

Beam Spread Classifications

Degrees

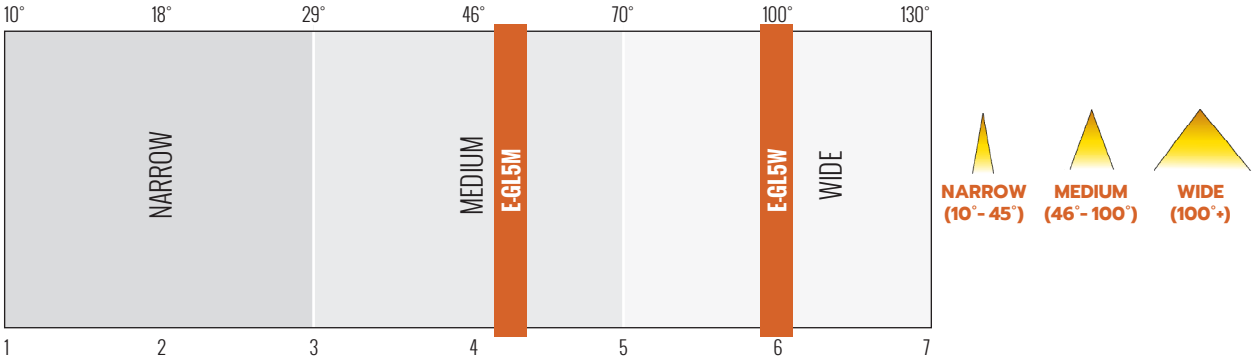

NEMA Type

Mounting Options

Conduit Slip Fitter
Cast aluminum hub provides a threaded entry for 1/2" adjustable fitter and slips over a 2-3/8" O.D. pipe or tenon
SKU: **E-ACMNH2DB**
USE: **For use in combination with wall mount or pole mount options**

Additional Mounting Options (Varies depending on application)

WALL MOUNT • Attaches to any flat surface • Provides wiring access		POLE MOUNT • For mounting one fixture on an existing pole	
	Wall Mount Box with 2-3/8" O.D. Tenon **SKU:** **E-ACWM1DB**		**4" Square Pole Mount with 2-3/8" O.D. Tenon** **SKU:** E-ACPB1A4Z **USE:** Fits over 3-1/2" O.D. square
	Wall Mount Bracket with 2-3/8" O.D. Tenon **SKU:** **E-ACWM2DB** **USE:** Allows fixture to be adjusted vertically	**GROUND MOUNT** • Provides wiring or conduit feed access through post base	
	90° Wall Mount Bracket with 2-3/8" O.D. Tenon **SKU:** **E-ACWM4DB** **USE:** Allows fixture to be adjusted vertically and horizontally		**Ground Mount Post** **SKU:** E-ACGM1DB **USE:** For ground mounted floodlight fixtures

1501 96th Street, Sturtevant, WI 53177 | Phone (888) 243-9445 | Fax (262) 504-5409 | www.e-conolight.com

FLOOD & AREA

E-GL5 Series

Premium LED Directional Floodlight - Small
Replaces 100W PSMH

Wide

Narrow/Medium

Sleek, energy - efficient design in a smaller package!

Versatile
- Medium (43°), Wide (93°) and Narrow (28°) distribution patterns for a variety of applications

Input Voltage
- Universal (120V through 277V Operation)

Recommended Use
- Building facades
- Security
- Architectural landscaping
- Highlighting signs & displays

Certifications

5 YEAR WARRANTY · WET LOCATION SUITABLE · UL LISTED · NON-DIMMABLE · DLC QPL LISTED · CREE LEDs

WARNING: Cancer and Reproductive Harm - www.p65warnings.ca.gov

e-conolight® | Quality Products, Affordably Priced.

1501 96th Street, Sturtevant, WI 53177 | Phone (888) 243-9445 | Fax (262) 504-5409 | www.e-conolight.com

FLOOD & AREA

E-GL5 Series - Small

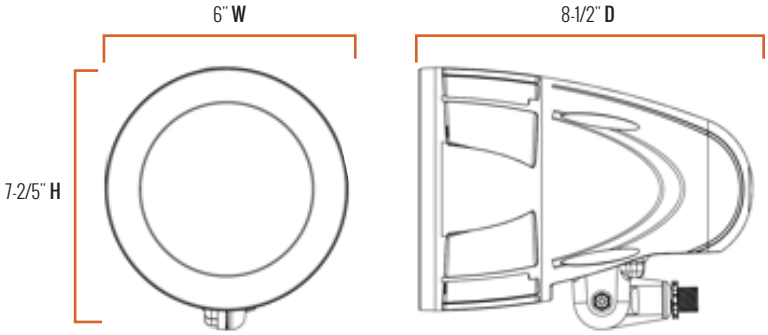

Series Overview

DIMENSIONS	PRODUCT WEIGHT	MOUNTING HEIGHT	SPACING
8-1/2" **D** x 6" **W** x 7-2/5" **H*** *Height dimension includes fitter	4.45 lbs.	---	---

Fixture Specifications

HOUSING	Low-copper, die-cast aluminum housing and lens frame Dark bronze polyester powder-coat finish
LENS ASSEMBLY	Tempered glass lens is thermal, shock and impact resistant
MOUNTING	1/2" NPS aluminum die-cast adjustable fitter attaches to standard junction box cover with 1/2" threaded coupling

Electrical Performance

OPERATING MINIMUM	LIFESPAN L_{70} AT 25°C (77°F)	POWER FACTOR	TOTAL HARMONIC DISTORTION	DIMMABLE
-40°C (-40°F)	Estimated >100,000 Hours	› 0.9	‹ 20%	No

INPUT VOLTAGE	120V	208V	240V	277V
Current Draw (Amps)	0.29A	0.17A	0.15A	0.13A

Warranty & Certifications

WARRANTY	UL LISTED	DLC	ENERGY STAR
5-Year Limited	Wet Locations	Yes	---

CORRELATED COLOR TEMPERATURE (CCT)

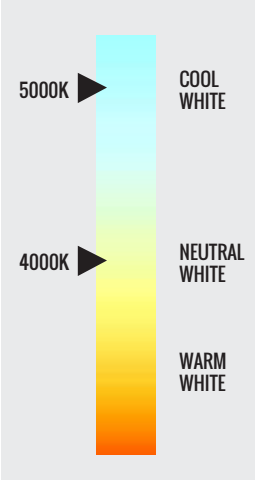

1501 96th Street, Sturtevant, WI 53177 | Phone (888) 243-9445 | Fax (262) 504-5409 | www.e-conolight.com

e-conolight®

FLOOD & AREA

E-GL5 Series - Small

Output Specifications

SKU	LIGHT OUTPUT	COLOR TEMP (See chart)	POWER CONSUMPTION	COLOR ACCURACY	DISTRIBUTION	REPLACES
E-GL5NFL02C2Z	3800 Lumens	Cool White (5000K)	35W	≥ 70 CRI	28° Flood	100W PSMH
E-GL5NFL02N2Z	3500 Lumens	Neutral White (4000K)	35W	≥ 70 CRI	28° Flood	100W PSMH
E-GL5MFL03C2Z	3800 Lumens	Cool White (5000K)	35W	≥ 70 CRI	43° Flood	100W PSMH
E-GL5MFL03N2Z	3500 Lumens	Neutral White (4000K)	35W	≥ 70 CRI	43° Flood	100W PSMH
E-GL5WFL03C2Z	3300 Lumens	Cool White (5000K)	35W	≥ 70 CRI	93° Flood	100W PSMH
E-GL5WFL03N2Z	3100 Lumens	Neutral White (4000K)	35W	≥ 70 CRI	93° Flood	100W PSMH

Beam Spread Classifications

Degrees

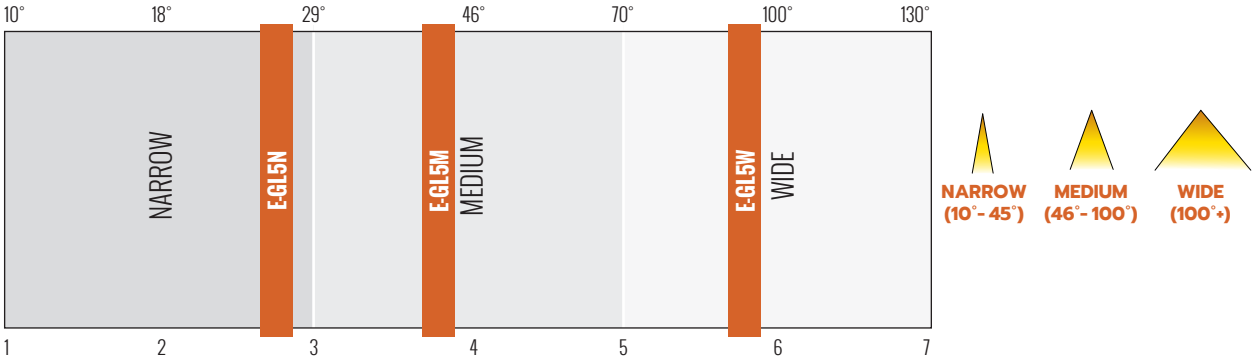

NEMA Type

Mounting Options

Conduit Slip Fitter

Cast aluminum hub provides a threaded entry for 1/2" adjustable fitter and slips over a 2-3/8" O.D. pipe or tenon

SKU: **E-ACMNH2DB**

USE: **For use in combination with wall mount or pole mount options**

1501 96th Street, Sturtevant, WI 53177 | Phone (888) 243-9445 | Fax (262) 504-5409 | www.e-conolight.com

e-conolight®

E-GL5 Series - Small

Beam Spread Classifications

Degrees

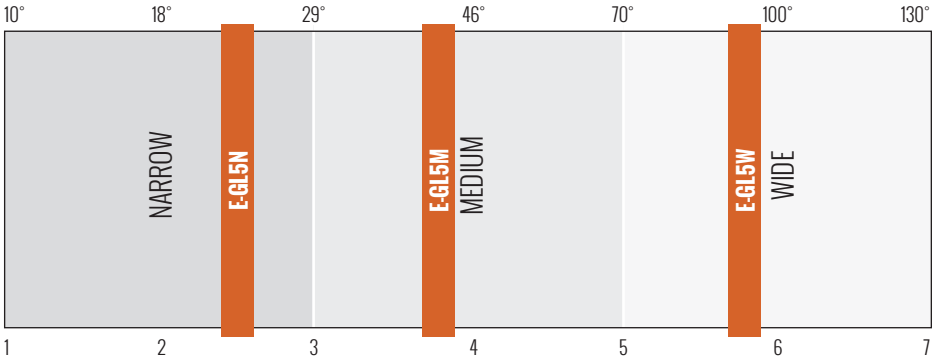

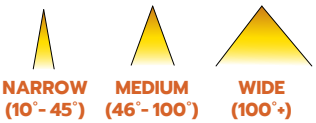

NEMA Type

Mounting Options

Conduit Slip Fitter
Cast aluminum hub provides a threaded entry for 1/2" adjustable fitter and slips over a 2-3/8" O.D. pipe or tenon
SKU: **E-ACMNH2DB**
USE: **For use in combination with wall mount or pole mount options**

Additional Mounting Options (Varies depending on application)

WALL MOUNT • Attaches to any flat surface • Provides wiring access		POLE MOUNT • For mounting one fixture on an existing pole	
	Wall Mount Box with 2-3/8" O.D. Tenon **SKU:** **E-ACWM1DB**		**4" Square Pole Mount with 2-3/8" O.D. Tenon** **SKU:** E-ACPB1A4Z **USE:** Fits over 3-1/2" O.D. square
	Wall Mount Bracket with 2-3/8" O.D. Tenon **SKU:** **E-ACWM2DB** **USE:** Allows fixture to be adjusted vertically	**GROUND MOUNT** • Provides wiring or conduit feed access through post base	
	90° Wall Mount Bracket with 2-3/8" O.D. Tenon **SKU:** **E-ACWM4DB** **USE:** Allows fixture to be adjusted vertically and horizontally		**Ground Mount Post** **SKU:** E-ACGM1DB **USE:** For ground mounted floodlight fixtures

1501 96th Street, Sturtevant, WI 53177 | Phone (888) 243-9445 | Fax (262) 504-5409 | www.e-conolight.com

e-conolight®

Tab 4

SŌLITUDE
LAKE MANAGEMENT

ANNUAL POND MANAGEMENT CONTRACT

PROPERTY NAME: CFM Magnolia CDD
CONTRACT TERM: May 1st, 2019 to April 30th, 2020
SUBMITTED TO: Belinda Blandon bblandon@rizzetta.com #239-936-0913
SUBMITTED BY: Jeff Moding
SPECIFICATIONS: Lake Management for 27 lakes 64.29

Visual Inspections:

1. Contractor will perform a visual inspection of the pond(s) during each visit to the site. The inspections shall include the following:
    - Water levels
    - Water clarity or quality
    - Turbidity
    - Beneficial Aquatic Vegetation
    - Nuisance, Invasive, or Exotic Aquatic Vegetation
    - Algae
    - Erosion
    - Issues with shoreline and bank stabilization measures such as rip rap stone, bulkheads, retaining walls, etc.
    - Trash and debris
2. Any issues or deficiencies that are observed during this visual monitoring will be documented by our staff in the field notes of the service order completed at the time the issue was first observed and reported to the client in writing as part of that month's service report.
3. Customer will be notified immediately if there are any deficiencies observed that appear in the judgment of our staff to be posing an immediate risk or otherwise jeopardizing the integrity of the pond(s) structures.
4. The scope of these services is limited to what can be reasonably observed at the surface of the water and above the ground around the water that makes up the physical structure of the pond(s). These routine inspection services are not intended to replace any requirement or need for a more comprehensive engineered inspection, or any other type of inspection that would require expertise or equipment to survey the condition of the physical components of the pond(s) underground, underwater, or inside any of the associated structures.

Pond Aquatic Weed Control:

1. Pond(s) will be inspected on a *two (2) times per month* basis.

Recipient may not disclose to any outside party any proprietary information, processes, or pricing contained in this document or any of its attachments without the prior written consent of SŌLitude Lake Management. This document is provided to the recipient in good faith and it shall be the responsibility of the recipient to keep the information contained herein confidential.

2. Any growth of undesirable aquatic weeds and vegetation found in the pond(s) with each inspection shall be treated and controlled through the application of aquatic herbicides and aquatic surfactants as required to control the specific varieties of aquatic weeds and vegetation found in the pond(s) at the time of application.
3. Invasive and unwanted submersed and floating vegetation will be treated and controlled preventatively and curatively each spring and early summer through the use of systemic herbicides at the rate appropriate for control of the target species. Application rates will be designed to allow for selective control of unwanted species while allowing for desirable species of submersed and emergent wetland plants to prosper.

Shoreline Aquatic Weed Control:

1. Shoreline areas will be inspected on a *two (2) times per month* basis.
2. Any growth of cattails, Torpedograss, or other unwanted shoreline vegetation found within the pond areas shall be treated and controlled through the application of aquatic herbicides and aquatic surfactants as required for control of the plants present at time of application.
3. Any growth of unwanted plants or weeds growing in areas where stone has been installed for bank stabilization and erosion control shall be treated and controlled through the application of aquatic herbicides and aquatic surfactants as required to control the unwanted growth present at the time of application.

Water Quality Monitoring:

1. Pond water samples will be taken and tested One (1) per year for the following parameters:

Temperature	Dissolved Oxygen
pH	

The results of the tests along with recommendations and analysis of the results will be provided to the client in a written report following each testing period.

1. Any data collected that needs immediate action to resolve an issue will be brought to the client's attention at once.

Pond Algae Control:

1. Pond(s) will be inspected on a *two (2) times per month* basis.
2. Any algae found in the pond(s) with each inspection shall be treated and controlled through the application of algaecides, aquatic herbicides, and aquatic surfactants as needed for control of the algae present at the time of service.

Recipient may not disclose to any outside party any proprietary information, processes, or pricing contained in this document or any of its attachments without the prior written consent of SŌLitude Lake Management. This document is provided to the recipient in good faith and it shall be the responsibility of the recipient to keep the information contained herein confidential.

Trash Removal:

1. Trash and light debris will be removed from the pond(s) with each service and disposed off site. Any large item or debris that is not easily and reasonably removable by one person during the routine visit will be removed with the client's approval for an additional fee. Routine trash and debris removal services are for the pond areas only, and do not include any trash or debris removal from the surrounding terrestrial (dry land) areas.

Client Responsibilities:

1. Client will be responsible for the following:
    a. Compliance and enforcement of temporary water-use restrictions where applicable.

Service Reporting:

1. Client will be provided with a monthly service report detailing all of the work performed as part of this contract.

General:

1. Contractor is a licensed pesticide applicator in the state in which service is to be provided.
2. Individual Managers are Certified Pesticide Applicators in Aquatics, Public Health, Forestry, Right of Way, and Turf/Ornamental as required in the state in which service is to be provided.
3. Contractor is a SePRO Preferred Applicator and dedicated Steward of Water. Each individual applicator has been trained and educated in the water quality testing and analysis required for site specific water quality management prescriptions and utilizes an integrated approach that encompasses all aspects of ecologically balanced management. Each applicator has received extensive training in the proper selection, use, and application of all aquatic herbicides, algaecides, adjuvants, and water quality enhancement products necessary to properly treat our clients' lakes and ponds as part of an overall integrated pest management program.
4. Contractor guarantees that all products used for treatment are EPA registered and labeled as appropriate and safe for use in lakes, ponds, and other aquatic sites, and are being applied in a manner consistent with their labeling.
5. All pesticide applications made directly to the water or along the shoreline for the control of algae, aquatic weeds, or other aquatic pests as specified in this contract will meet or exceed all of the contractor's legal regulatory requirements as set forth by the EPA and related state agencies for NPDES and FIFRA. Contractor will perform treatments that are consistent with NPDES compliance standards as applicable in and determined by the specific state in which treatments are made. All staff will be fully trained to perform all applications in compliance with all federal, state, and local law.

Recipient may not disclose to any outside party any proprietary information, processes, or pricing contained in this document or any of its attachments without the prior written consent of SŌLitude Lake Management. This document is provided to the recipient in good faith and it shall be the responsibility of the recipient to keep the information contained herein confidential.

6. Contractor will furnish personnel, equipment, boats, materials, and other items required to provide the foregoing at his expense.
7. Contractor will maintain general liability and workman's compensation insurance.
8. Client understands and acknowledges that there are irrigation restrictions associated with many of the products used to treat their ponds. The client is responsible for notifying the contractor in advance of the contract signing and the start of the contract treatment if they utilize any of the water in their ponds for irrigation purposes. The client accepts full responsibility for any issues that may arise from the irrigation of turf, ornamentals, trees, crops, or any other plants as a result of treated water being used by the client for irrigation without the consent or knowledge of the contractor.
9. Although there is rarely direct fish toxicity with the products used for treatment when applied at the labeled rate, any time there is an extreme infestation of algae and aquatic weeds, there is a risk of dissolved oxygen drops as a result of large masses of algae and aquatic weeds dying and decomposing simultaneously. This risk is most severe in times of extremely hot weather and warm water temperatures, as these are the conditions during which dissolved oxygen levels are naturally at their lowest levels. Often ponds will experience natural fish kills under these conditions even if no treatment is performed. Every effort, to include the method and timing of application, the choice of products, and the skill and training of the applicators is made to avoid such problems. This risk is especially mitigated by the use of systemic herbicides wherever possible, which results in a very slow steady control of the target weed species. However, the client understands and accepts that there is always a slight risk of the occurrence of adverse conditions outside the control of the contractor that will result in the death of some fish and other aquatic life. The client also understands and accepts that similar risks would remain if the algae or submersed invasive vegetation present in the pond goes uncontrolled, as it will over time interfere with the health and well being of the existing fish population. The client agrees to hold the contractor harmless for any issues with fish or other aquatic life which occur as described above, or are otherwise outside the direct control of the contractor, unless there is willful negligence on the part of the contractor.
10. Contractor shall be reimbursed by the client for any non-routine expenses, administrative fees, compliance fees, or any other similar expense that are incurred as a result of requirements placed on the contractor by the client that are not covered specifically by the written specifications of this contract.
11. The term of this agreement is for a period of twelve (12) months, with payment to be made in twelve (12) equal monthly payments due by the last day of each month. As a courtesy, the client will be invoiced on the first day of each month, reminding them that a contract payment is due by the end of that same month. The client is obligated to pay each monthly contract payment per the terms of this contract, without any obligation on the part of the contractor to invoice or send any other sort of reminder or notice. The Annual Contract Price is based on the total value of services to be provided over a period of twelve (12) months. For the

Recipient may not disclose to any outside party any proprietary information, processes, or pricing contained in this document or any of its attachments without the prior written consent of SŌLitude Lake Management. This document is provided to the recipient in good faith and it shall be the responsibility of the recipient to keep the information contained herein confidential.

convenience of the client, we offer Monthly Contract Pricing that is simply an even twelve (12) month amortization of the Annual Contract Price. Due to the seasonality of these services, and the disproportionate amount of time and materials dedicated to providing these services during some times of the year as compared to others, based on the season, weather patterns, and other natural factors, the amount billed and paid to date is not necessarily equivalent to the amount of work performed to date.

12. Contract will automatically renew annually at the end of the contract period for subsequent one (1) year terms, with a three percent (3%) escalation in the Annual Contract Price and Additional Enhancements each year, under the same terms, specifications, and conditions as set forth by this contract, unless either party gives written notice of cancellation thirty (30) days prior to the termination date of this contract, or subsequent renewal contracts.
13. The client agrees to pay penalties and interest in the amount of 2% per month for all past due invoices and related account balances in excess of 30 days past due from the due date as specified by the contract and as stated on the relevant invoice presented to the client.
14. The client covenants and agrees to pay reasonable attorney's fees and all other related costs and expenses of SŌLitude Lake Management® for collection of past due invoices and account balances and for any other actions required to remedy a material breach of this contract.

CONTRACT PRICE: **$21,036.00 Total Annual Contract**
$1753.00 Monthly Service Amount for twelve (12) months

APPROVED: _____ SŌLitude Lake Management®

_____ **CFM Magnolia Landing CDD**
(Authorized Client Signature)

_____
(Print Name and Title)

_____
(Date)

Recipient may not disclose to any outside party any proprietary information, processes, or pricing contained in this document or any of its attachments without the prior written consent of SŌLitude Lake Management. This document is provided to the recipient in good faith and it shall be the responsibility of the recipient to keep the information contained herein confidential.

Tab 5

CRI CARR RIGGS & INGRAM
CPAs and Advisors

Carr, Riggs & Ingram, LLC
Certified Public Accountants
500 Grand Boulevard
Suite 210
Miramar Beach, Florida 32550

(850) 837-3141
(850) 654-4619 (fax)
CRIcpa.com

March 27, 2019

The Board of Supervisors
CFM Community Development District

We are pleased to present the results of our audit of the fiscal year 2018 financial statements of the CFM Community Development District ("the District").

This report to the Board of Supervisors and Management summarizes our audit, the report issued and various analyses and observations related to the District's accounting and reporting. The document also contains the communications required by our professional standards.

Our audit was designed, primarily, to express an opinion on the District's September 30, 2018 financial statements. We considered the District's current and emerging business needs, along with an assessment of risks that could materially affect the financial statements, and aligned our audit procedures accordingly. We conducted the audit with the objectivity and independence that you expect. We received the full support and assistance of the District's personnel.

At Carr, Riggs & Ingram, LLC (CRI), we are continually evaluating the quality of our professionals' work in order to deliver audit services of the highest quality that will meet or exceed your expectations. We encourage you to provide any feedback you believe is appropriate to ensure that we do not overlook a single detail as it relates to the quality of our services.

This report is intended solely for the information and use of the Board of Supervisors, Management and others within the District and should not be used by anyone other than these specified parties.

We appreciate this opportunity to work with you. If you have any questions or comments, please contact me at 850-837-3141 or scriggs@cricpa.com.

Very truly yours,

Stephen Riggs
Partner

As discussed with the Board of Supervisors and Management during our planning process, our audit plan represented an approach responsive to the assessment of risk for the District. Specifically, we planned and performed our audit to:

- Perform audit services, as requested by the Board of Supervisors, in accordance with auditing standards generally accepted in the United States of America and the standards applicable to financial audits contained in *Government Auditing Standards* issued by the Comptroller General of the United States, in order to express an opinion on the District's financial statements for the year ended September 30, 2018;

- Communicate directly with the Board of Supervisors and Management regarding the results of our procedures; and

- Address with the Board of Supervisors, and management any accounting and financial reporting issues.

We have audited the financial statements of CFM Community Development District for the year ended September 30, 2018, and have issued our report thereon dated March 27, 2019. Professional standards require that we provide you with the following information related to our audit:

MATTER TO BE COMMUNICATED	AUDITOR'S RESPONSE
Auditor's responsibility under Generally Accepted Auditing Standards and *Government Auditing Standards*	See our engagement letter dated August 27, 2018.
Client's responsibility	See our engagement letter dated August 27, 2018.
Planned scope and timing of the audit	See our engagement letter dated August 27, 2018.
Accounting policies, sensitive estimates, and sensitive disclosures	Please see page 3 titled "Accounting Policies, Sensitive Estimates and Significant Disclosures."
Significant difficulties encountered in the audit	None.
Disagreements with management	None.
Other findings or issues	Finding IC2010-1. See page 27 of the fiscal year 2018 financial statements.
Corrected and uncorrected misstatements	See the following section titled "Summary of Audit Adjustments."
Consultations with other accountants	None of which we are aware.
Written representations	We have requested certain representations from management that are included in the management representation letter dated March 27, 2019.

Accounting Policies, Sensitive Estimates and Significant Disclosures

Management is responsible for the selection and use of appropriate accounting policies. The significant accounting policies used by the District are described in Note 2 to the financial statements. No new accounting policies were adopted and the application of existing policies was not changed during the year. We noted no transactions entered into by the District during the year for which there is a lack of authoritative guidance or consensus. All significant transactions have been recognized in the financial statements in the proper period.

Accounting estimates are an integral part of the financial statements prepared by management and are based on management's knowledge and experience about past and current events and assumptions about future events. Certain accounting estimates are particularly sensitive because of their significance to the financial statements and because of the possibility that future events affecting them may differ significantly from those expected. In addition, certain financial statement disclosures are particularly sensitive because of their significance to financial statement users. The following table identifies sensitive estimates and significant disclosures.

AREA	SENSITIVE ESTIMATE OR SIGNIFICANT DISCLOSURE
Notes 5 and 8 to the financial statement regarding the District's dependence on the SPE and the outstanding assessments due from the SPE. These uncollected assessments led to the District's nonpayment of the required debt service payments.	Significant disclosure
Note 9 to the financial statements regarding the forbearance and transition agreements with the Previous Developer, D.R. Horton, and the SPE.	Significant disclosure
Note 10 to the financial statements regarding the escrow agreement between the District and Lee County, Florida.	Significant disclosure
Note 11 to the financial statements regarding the commitment related to the wetland mitigation project.	Significant disclosure
Note 12 to the financial statements regarding a potential claim against the SPE and D.R. Horton and additional conservation maintenance services required by the water management district.	Significant disclosure

During the course of our audit, we accumulate differences between amounts recorded by the Organization and amounts that we believe are required to be recorded under Generally Accepted Accounting Principles ("GAAP"). Those adjustments are either recorded (corrected) by the Organization or passed (uncorrected).

In connection with our audit, we proposed the following material adjustment which was corrected by management:

- An adjustment totaling $815,000 to properly state the debt service obligation.

In connection with our audit, we identified an adjustment totaling $7,021 to accrue engineering and landscape maintenance expenditures. This adjustment was not corrected because management believes and we agree it is not material to the financial statements as a whole.

CFM Community Development District

FINANCIAL STATEMENTS

September 30, 2018

CFM Community Development District
Table of Contents
September 30, 2018

REPORT
Independent Auditors' Report 1

FINANCIAL STATEMENTS
Management's Discussion And Analysis (required supplemental information) 3

Basic Financial Statements
Government-Wide Financial Statements

Statement of Net Position 8

Statement of Activities 9

Fund Financial Statements

Balance Sheet – Governmental Funds 10

Reconciliation of the Balance Sheet of Governmental Funds to the Statement of Net Position 11

Statement of Revenues, Expenditures and Changes in Fund Balances – Governmental Funds 12

Reconciliation of the Statement of Revenues, Expenditures and Changes in Fund Balances of Governmental Funds to the Statement of Activities 13

Notes to Financial Statements 14

Required Supplemental Information (other than MD&A)

Budget to Actual Comparison Schedule - General Fund 25

Independent Auditors' Report on Internal Control Over Financial Reporting and on Compliance and Other Matters Based on an Audit of Financial Statements Performed in Accordance With *Government Auditing Standards* 26

Management Letter 28

Independent Accountant's Report – Compliance with Section 218.415 Florida Statutes 31

CRI CARR RIGGS & INGRAM
CPAs and Advisors

Carr, Riggs & Ingram, LLC
Certified Public Accountants
500 Grand Boulevard
Suite 210
Miramar Beach, Florida 32550

(850) 837-3141
(850) 654-4619 (fax)
CRIcpa.com

INDEPENDENT AUDITORS' REPORT

To the Board of Supervisors
CFM Community Development District
Lee County, Florida

Report on the Financial Statements

We have audited the accompanying financial statements of the governmental activities and each major fund of CFM Community Development District (hereinafter referred to as "District"), as of and for the year ended September 30, 2018, and the related notes to the financial statements, which collectively comprise the District's basic financial statements as listed in the table of contents.

Management's Responsibility for the Financial Statements

Management is responsible for the preparation and fair presentation of these financial statements in accordance with accounting principles generally accepted in the United States of America; this includes the design, implementation, and maintenance of internal control relevant to the preparation and fair presentation of financial statements that are free from material misstatement, whether due to fraud or error.

Auditors' Responsibility

Our responsibility is to express opinions on these financial statements based on our audit. We conducted our audit in accordance with auditing standards generally accepted in the United States of America and the standards applicable to financial audits contained in *Government Auditing Standards*, issued by the Comptroller General of the United States. Those standards require that we plan and perform the audit to obtain reasonable assurance about whether the financial statements are free from material misstatement.

An audit involves performing procedures to obtain audit evidence about the amounts and disclosures in the financial statements. The procedures selected depend on the auditor's judgment, including the assessment of the risks of material misstatement of the financial statements, whether due to fraud or error. In making those risk assessments, the auditor considers internal control relevant to the entity's preparation and fair presentation of the financial statements in order to design audit procedures that are appropriate in the circumstances, but not for the purpose of expressing an opinion on the effectiveness of the entity's internal control. Accordingly, we express no such opinion. An audit also includes evaluating the appropriateness of accounting policies used and the reasonableness of significant accounting estimates made by management, as well as evaluating the overall presentation of the financial statements.

We believe that the audit evidence we have obtained is sufficient and appropriate to provide a basis for our audit opinions.

Opinions

In our opinion, the financial statements referred to above present fairly, in all material respects, the respective financial position of the governmental activities and each major fund of the District as of September 30, 2018, and the respective changes in financial position for the year then ended in accordance with accounting principles generally accepted in the United States of America.

Other Matters

Required Supplementary Information

Accounting principles generally accepted in the United States of America require that the management's discussion and analysis and budgetary comparison information, as listed in the table of contents, be presented to supplement the basic financial statements. Such information, although not a part of the basic financial statements, is required by the Governmental Accounting Standards Board, who considers it to be an essential part of financial reporting for placing the basic financial statements in an appropriate operational, economic, or historical context. We have applied certain limited procedures to the required supplementary information in accordance with auditing standards generally accepted in the United States of America, which consisted of inquiries of management about the methods of preparing the information and comparing the information for consistency with management's responses to our inquiries, the basic financial statements, and other knowledge we obtained during our audit of the basic financial statements. We do not express an opinion or provide any assurance on the information because the limited procedures do not provide us with sufficient evidence to express an opinion or provide any assurance.

Other Reporting Required by Government Auditing Standards

In accordance with *Government Auditing Standards*, we have also issued our report dated March 27, 2019, on our consideration of the District's internal control over financial reporting and our tests of its compliance with certain provisions of laws, regulations, contracts and grant agreements and other matters. The purpose of that report is to describe the scope of our testing of internal control over financial reporting and compliance and the results of that testing, and not to provide an opinion on the internal control over financial reporting or on compliance. That report is an integral part of an audit performed in accordance with *Government Auditing Standards* in considering the District's internal control over financial reporting and compliance.

Carr, Riggs & Ingram, L.L.C.

Miramar Beach, Florida
March 27, 2019

Management’s Discussion And Analysis

Our discussion and analysis of the CFM Community Development District's financial performance provides an overview of the District's financial activities for the fiscal year ended September 30, 2018. Please read it in conjunction with the District's financial statements, which begin on page 8.

FINANCIAL HIGHLIGHTS

- At September 30, 2018, the liabilities of the District exceed its assets by approximately $29.9 million (deficit net position).

- During the fiscal year ended September 30, 2018, principal prepayments totaling $815,000 were made, while none of the scheduled debt service payments due November 1, 2017 and May 1, 2018, and prior periods, were made. As a result, the District has accrued a debt service obligation totaling approximately $17.9 million, which includes the scheduled bond principal payments due of approximately $4.8 million.

USING THE ANNUAL REPORT

This annual report consists of a series of financial statements. The Statement of Net Position and the Statement of Activities on pages 8 – 9 provide information about the activities of the District as a whole and present a longer-term view of the District's finances. Fund financial statements start on page 10. For governmental activities, these statements tell how these services were financed in the short-term as well as what remains for future spending. Fund financial statements also report the District's operations in more detail than the government-wide statements by providing information about the District's most significant funds.

Reporting the District as a Whole

Our analysis of the District as a whole begins on page 4. One of the most important questions asked about the District's finances is, "Is the District as a whole better off or worse off as a result of the year's activities?" The Statement of Net Position and the Statement of Activities report information about the District as a whole and about its activities in a way that helps answer this question. These statements include all assets and liabilities using the accrual basis of accounting, which is similar to the accounting used by most private-sector companies. All of the current year's revenues and expenses are taken into account regardless of when cash is received or paid.

These two statements report the District's net position and related changes during the current year. You can think of the District's net position – the difference between assets and liabilities – as one way to measure the District's financial health, or financial position. Over time, increases or decreases in the District's net position is one indicator of whether its financial health is improving or deteriorating. You will need to consider other nonfinancial factors, however, such as changes in the District's assessment base and the condition of the District's infrastructure, to assess the overall health of the District.

Reporting the District's Most Significant Funds

Our analysis of the District's major funds begins on page 5. The fund financial statements begin on page 10 and provide detailed information about the most significant funds – not the District as a whole. Some funds are required to be established by State law and by bond covenants. All of the District's funds are governmental fund-types.

- *Governmental funds* – All of the District's basic services are reported in governmental funds, which focus on how money flows into and out of those funds and the balances left at year-end that are available for spending. These funds are reported using an accounting method called modified accrual accounting, which measures cash and all other financial assets that can readily be converted to cash. The governmental fund statements provide a detailed short-term view of the District's general government operations and the basic services it provides. Governmental fund information helps you determine whether there are more or fewer financial resources that can be spent in the near future to finance the District's programs.

THE DISTRICT AS A WHOLE

The following table reflects the condensed Statement of Net Position and is compared to the prior year.

September 30,	2018	2017	Change
Assets			
Current and other assets	$ 553,191	$ 1,435,976	$ (882,785)
Capital assets, net	7,819,489	8,150,100	(330,611)
Total assets	$ 8,372,680	$ 9,586,076	$ (1,213,396)
Liabilities			
Current liabilities	$ 19,265,378	$ 17,438,474	$ 1,826,904
Other liabilities	19,040,000	20,570,000	(1,530,000)
Total liabilities	38,305,378	38,008,474	296,904
Net position			
Net investment in capital assets	(4,564,806)	(4,442,189)	(122,617)
Unrestricted	(25,367,892)	(23,980,209)	(1,387,683)
Total net position (deficit)	(29,932,698)	(28,422,398)	(1,510,300)
Total liabilities and net position	$ 8,372,680	$ 9,586,076	$ (1,213,396)

For more detailed information, see the accompanying Statement of Net Position.

During the fiscal year ended September 30, 2018, total assets decreased approximately $1.2 million, while total liabilities increased by approximately $297,000 from the prior fiscal year. The decrease in assets is primarily a result of depreciation on capital assets and SPE costs. The increase in liabilities is primarily due to the unpaid interest related to the scheduled debt service payments, which is partially offset by principal prepayments made on long-term debt during the year.

The following schedule compares the Statement of Activities for the current and previous fiscal year.

Year ended September 30,	**2018**	**2017**	**Change**
Revenues:			
Program revenues:			
Charges for services	$ 838,330	$ 811,202	$ 27,128
Grants and contributions	1,111,638	33,970	1,077,668
General revenues:			
Interest	157	-	157
Total revenues	1,950,125	845,172	1,104,953
Expenses:			
General government	1,152,683	634,631	518,052
Maintenance and operations	769,435	452,743	316,692
Interest	1,538,307	1,586,172	(47,865)
Total expenses	3,460,425	2,673,546	786,879
Change in net position	(1,510,300)	(1,828,374)	318,074
Net position (deficit), beginning of year	(28,422,398)	(26,594,024)	(1,828,374)
Net position (deficit), end of year	$ (29,932,698)	$ (28,422,398)	$ (1,510,300)

For more detailed information, see the accompanying Statement of Activities.

Revenues and expenses increased by approximately $1.1 million and $787,000, respectively. The increase in revenues was primarily due to the prepayment revenues and contributions received from the SPE. The increase in expenses is primarily due to an increase in SPE and wetland mitigation project costs. The overall result was a $1,510,300 decrease in net position for fiscal year 2018.

THE DISTRICT'S FUNDS

As the District completed the year, its governmental funds (as presented in the balance sheet on page 10) reported a combined deficit fund balance of approximately $17.4 million, which is a significant decrease from last year's deficit fund balance that totaled approximately $14.7 million. Significant transactions are discussed below.

- During the fiscal year ended September 30, 2018, principal prepayments totaling $815,000 were made, while none of the scheduled debt service payments due November 1, 2017 and May 1, 2018, and prior periods, were made. As a result, the District has accrued a debt service obligation totaling approximately $17.9 million, which includes the scheduled bond principal payments due of approximately $4.8 million.

The overall decrease in fund balance for the year ended September 30, 2018 totaled approximately $2.7 million.

CAPITAL ASSET AND DEBT ADMINISTRATION

Capital Assets

At September 30, 2018, the District had approximately $7.8 million invested in capital assets (net of accumulated depreciation). This amount represents a decrease of approximately $331,000 from the fiscal year 2017 total.

A listing of capital assets by major category for the current and prior year follows:

September 30,	**2018**	**2017**	**Change**
Land	$ 2,668,665	$ 2,668,665	$ -
Capital assets being depreciated	8,265,280	8,265,280	-
Total, prior to depreciation	10,933,945	10,933,945	-
Accumulated depreciation	(3,114,456)	(2,783,845)	(330,611)
Net capital assets	$ 7,819,489	$ 8,150,100	$ (330,611)

More information about the District's capital assets is presented in Note 3 to the financial statements.

Debt

At September 30, 2018, the District had approximately $24.5 million of bonds outstanding. This amount decreased by $815,000 from the fiscal year 2017 total.

A listing of debt amounts outstanding for the current and prior year is as follows:

September 30,	**2018**	**2017**	**Change**
Series 2004 A bonds	$ 24,545,000	$ 25,360,000	$ (815,000)
	$ 24,545,000	$ 25,360,000	$ (815,000)

More information about the District's long-term debt is presented in Note 5 to the financial statements.

GOVERNMENTAL FUNDS BUDGETARY HIGHLIGHTS

An Operating budget was established by the governing board for the District pursuant to the requirements of Florida Statutes. The budget to actual comparison for the general fund, including the original budget and final adopted budget, is shown at page 25.

The District experienced a favorable variance in revenues and expenditures as compared to the budget in the amount of $995 and $68,031, respectively. The variance in expenditures occurred primarily due to anticipated budgeted operating expenditures that were not incurred during the year.

FUTURE FINANCIAL FACTORS

CFM Community Development District is an independent special district that operates under the provisions of Chapter 190, Florida Statutes. The District operates under an elected Board of Supervisors, which, among other things, establishes policy and sets assessment rates. Assessment rates for fiscal year 2019 were established to provide for the operations of the District.

The District did not receive the majority of the debt service assessments for lands owned by Windham Magnolia Landing, LLC ("Previous Developer") during 2011 and 2012, which are now owned by Maxcy Development Group Holdings – CFM, Inc. (the "SPE") (see Note 9 to the financial statements). The District has been unable to make the scheduled debt service payments since May 2010.

CONTACTING THE DISTRICT'S FINANCIAL MANAGEMENT

This financial report is designed to provide a general overview of the District's finances. If you have questions about this report or need additional financial information, contact the CFM Community Development District's finance department at 3434 Colwell Avenue, Suite 200, Tampa, Florida 33614.

Basic Financial Statements

September 30,		**2018**
		Governmental Activities
Assets		
Cash and cash equivalents	$	387,061
Investments		154,129
Prepaid expenses		7,601
Deposits		4,400
Capital assets:		
Not being depreciated		2,668,665
Depreciable, net		5,150,824
Total assets		8,372,680
Liabilities		
Accounts payable		30,485
Accrued expenses payable		23,495
Accrued interest payable		13,706,398
Non-current liabilities:		
Due within one year		5,505,000
Due in more than one year		19,040,000
Total liabilities		38,305,378
Net position		
Net investment in capital assets		(4,564,806)
Unrestricted		(25,367,892)
Total net position (deficit)	$	(29,932,698)

The accompanying notes are an integral part of these financial statements.

Year ended September 30, **2018**

Functions/Programs	Expenses	Program Revenues: Charges for Services	Program Revenues: Operating Grants and Contributions	Net (Expense) Revenue and Changes in Net Position: Governmental Activities
Primary government:				
Governmental activities:				
General government	$ (1,152,683)	$ 95,128	$ -	$ (1,057,555)
Maintenance and operations	(769,435)	272,108	293,869	(203,458)
Interest	(1,538,307)	471,094	817,769	(249,444)
Total governmental activities	$ (3,460,425)	$ 838,330	$ 1,111,638	(1,510,457)

General revenues	
Interest	157
Total general revenues	157
Change in net position	(1,510,300)
Net position (deficit) - beginning of year	(28,422,398)
Net position (deficit) - end of year	$ (29,932,698)

The accompanying notes are an integral part of these financial statements.

CFM Community Development District
Balance Sheet – Governmental Funds

September 30,	2018		
	General	**Debt Service**	**Total Governmental Funds**
Assets			
Cash and cash equivalents	$ 387,061	$ -	$ 387,061
Investments	-	154,129	154,129
Prepaid expenditures	7,601	-	7,601
Deposits	4,400	-	4,400
Total assets	$ 399,062	$ 154,129	$ 553,191
Liabilities and Fund Balances			
Liabilities			
Accounts payable	$ 30,485	$ -	$ 30,485
Accrued expenditures payable	3,495	20,000	23,495
Debt service obligation	-	17,857,205	17,857,205
Total liabilities	33,980	17,877,205	17,911,185
Fund balances			
Nonspendable	12,001	-	12,001
Unassigned	353,081	(17,723,076)	(17,369,995)
Total fund balances (deficit)	365,082	(17,723,076)	(17,357,994)
Total liabilities and fund balances	$ 399,062	$ 154,129	$ 553,191

The accompanying notes are an integral part of these financial statements.

CFM Community Development District
Reconciliation of the Balance Sheet of Governmental Funds to the Statement of Net Position

September 30,		**2018**
Total fund balances (deficit), governmental funds	$	(17,357,994)
Capital assets used in governmental activities are not financial resources and therefore are not reported in the fund level statements.		7,819,489
Liabilities not due and payable from current resources, including accrued interest, are not reported in the fund level statements.		(20,394,193)
Total net position (deficit) - governmental activities	$	(29,932,698)

The accompanying notes are an integral part of these financial statements.

CFM Community Development District
Statement of Revenues, Expenditures and Changes in Fund Balances – Governmental Funds

Year ended September 30,		2018	
	General	**Debt Service**	**Total Governmental Funds**
Revenues			
Assessments	$ 367,236	$ 471,094	$ 838,330
Prepayment revenue	-	812,268	812,268
SPE contributions	293,869	-	293,869
Interest	157	5,501	5,658
Total revenues	661,262	1,288,863	1,950,125
Expenditures			
Current:			
General government	153,412	999,271	1,152,683
Maintenance and operations	438,824	-	438,824
Debt service:			
Principal	-	1,490,000	1,490,000
Interest	-	1,559,531	1,559,531
Total expenditures	592,236	4,048,802	4,641,038
Excess (deficit) of revenues over expenditures	69,026	(2,759,939)	(2,690,913)
Fund balances (deficit), beginning of year	296,056	(14,963,137)	(14,667,081)
Fund balances (deficit), end of year	$ 365,082	$ (17,723,076)	$ (17,357,994)

The accompanying notes are an integral part of these financial statements.

CFM Community Development District
Reconciliation of the Statement of Revenues, Expenditures and Changes in Fund Balances of Governmental Funds to the Statement of Activities

Year ended September 30,		**2018**
Net change in fund balances - governmental funds	$	(2,690,913)
Depreciation on capital assets is not recognized in the fund financial statements but is reported as an expense in the Statement of Activities.		(330,611)
Governmental fund financial statements report scheduled and prepaid principal payments on bonds when debt is due or prepaid, even though some amounts ($675,000) have not been paid, whereas these amounts do not affect the Statement of Activities.		1,490,000
The change in accrued interest between the current and prior year is recorded on the Statement of Activities but not on the fund financial statements.		21,224
Change in net position of governmental activities	$	(1,510,300)

The accompanying notes are an integral part of these financial statements.

NOTE 1: NATURE OF ORGANIZATION

The CFM Community Development District (the "District") was established on January 14, 2002 pursuant to the Uniform Community Development District Act of 1980, otherwise known as Chapter 190, Florida Statutes, by Lee County Ordinance No. 02-01. The Act provides, among other things, the power to manage basic services for community development, power to borrow money and issue bonds, and to levy and assess non-ad valorem assessments for the financing and delivery of capital infrastructure.

The District was established for the purposes of financing and managing the acquisition, construction, maintenance and operation of a portion of the infrastructure necessary for community development within the District.

The District is governed by a Board of Supervisors ("Board"), which is comprised of five members. The Supervisors are elected on an at large basis by landowners of the District, or elected at the general election in November, appointed by the board to fill a vacant seat, or are landowner holdovers in resident seats. Four Supervisors are affiliated with and the District is economically dependent on Maxcy Development Group Holdings – CFM, Inc. (the "SPE"). The Board of Supervisors of the District exercises all powers granted to the District pursuant to Chapter 190, Florida Statutes.

The Board has the final responsibility for:

1. Allocating and levying assessments.
2. Approving budgets.
3. Exercising control over facilities and properties.
4. Controlling the use of funds generated by the District.
5. Approving the hiring and firing of key personnel.
6. Financing improvements.

In evaluating how to define the government, for financial reporting purposes, management has considered all potential component units. The decision to include or exclude a potential component unit in the reporting entity was made by applying the criteria set forth by Generally Accepted Accounting Principles (GAAP) as defined by the Governmental Accounting Standards Board (GASB). Based on the foregoing criteria, no potential component units were found.

NOTE 2: SUMMARY OF SIGNIFICANT ACCOUNTING POLICIES

The accounting policies of the District conform to GAAP as applicable to governments in accordance with those promulgated by GASB. The following is a summary of the more significant policies:

Government-wide and Fund Financial Statements

The basic financial statements include both government-wide and fund financial statements.

NOTE 2: SUMMARY OF SIGNIFICANT ACCOUNTING POLICIES (Continued)

The government-wide financial statements (i.e., the Statement of Net Position and the Statement of Activities) report information on all the non-fiduciary activities of the primary government. Governmental activities, which normally are supported by assessments, are reported separately from business-type activities, which rely to a significant extent on fees and charges for support. The business-type activities are reported separately in government-wide financial statements; however, at September 30, 2018, the District did not have any significant business-type activities. Therefore, no business-type activities are reported. Assessments and other items not properly included as program revenues (i.e., charges to customers or applicants who purchase, use, or directly benefit from goods or services) are reported as general revenues.

Separate financial statements are provided for governmental funds. Major individual governmental funds are reported as separate columns in the fund financial statements.

Measurement Focus, Basis of Accounting and Basis of Presentation

The government-wide financial statements are reported using the economic resources measurement focus and the accrual basis of accounting. Revenues are recorded when earned and expenses are recorded when a liability is incurred, regardless of the timing of the related cash flows. Assessments are recognized as revenues in the year for which they are levied. Grants and other similar items are to be recognized as revenue as soon as all eligibility requirements imposed by the provider have been met.

Governmental fund financial statements are reported using the current financial resources measurement focus and the modified accrual basis of accounting. Revenues are recognized as soon as they are both measurable and available. Revenues are considered to be available when they are collectible within the current period or soon enough thereafter to pay liabilities of the current period. For this purpose, the District considers revenues to be available if they are collected within 60 days of the end of the current fiscal period. Expenditures generally are recorded when a liability is incurred, as under accrual accounting. However, debt service expenditures are recorded only when payment is due.

Assessments, including debt service assessments along with operation and maintenance assessments, are non-ad valorem special assessments imposed on all developable lands located within the District and benefited by the District's activities. Operation and maintenance assessments are levied and certified for collection by the District prior to the start of the fiscal year which begins October 1st and ends on September 30th. Assessments are imposed upon all benefited lands located in the District as described in each resolution imposing the special assessment.

Assessments and interest associated with the current fiscal period are all considered to be susceptible to accrual and have been recognized as revenues of the current fiscal period. All other revenue items are considered to be measurable and available only when cash is received by the District.

NOTE 2: SUMMARY OF SIGNIFICANT ACCOUNTING POLICIES (Continued)

The District reports the following major governmental funds:

General Fund – The General Fund is the primary operating fund of the District. It is used to account for all financial resources except those required to be accounted for in other funds.

Debt Service Fund – The Debt Service Fund is used to account for the accumulation of resources for the annual payment of principal and interest on long-term debt.

For the year ended September 30, 2018, the District does not report any proprietary funds.

As a general rule, the effect of interfund activity has been eliminated from the government-wide financial statements.

When both restricted and unrestricted resources are available for use, it is the District's policy to use restricted resources first, then unrestricted resources as they are needed. When committed, assigned, or unassigned resources are available for use in the governmental fund financial statements, it is the government's policy to use committed resources first, followed by assigned resources, then unassigned resources as needed.

Cash, Deposits and Investments

The District maintains deposits with "Qualified Public Depositories" as defined in Chapter 280, Florida Statutes. All Qualified Public Depositories must place with the Treasurer of the State of Florida securities in accordance with collateral requirements determined by the State's Chief Financial Officer. In the event of default by a Qualified Public Depository, the State Treasurer will pay public depositors all losses. Losses in excess of insurance and collateral will be paid through assessments between all Qualified Public Depositories.

Under this method, all the District's deposits are fully insured or collateralized at the highest level of security as defined by GASB, Statement Number 40*, Deposits and Investment Disclosures (An Amendment of GASB, Statement Number 3).*

The District is authorized to invest in financial instruments as established by Section 218.415, Florida Statutes. The authorized investments include among others negotiable direct or indirect obligations which are secured by the United States Government; the Local Government Surplus Trust Funds as created by Section 218.405, Florida Statutes; SEC registered money market funds with the highest credit quality rating from a nationally recognized rating agency; and interest-bearing time deposits or savings accounts in authorized financial institutions.

NOTE 2: SUMMARY OF SIGNIFICANT ACCOUNTING POLICIES (Continued)

Capital Assets

Capital assets, which include primarily infrastructure assets (e.g., roads, sidewalks, water management systems and similar items), are reported in the governmental activities column in the government-wide financial statements. Capital assets are defined by the District as assets with an initial/individual cost of more than $5,000 and an estimated useful life in excess of two years. Such assets are recorded at historical cost and estimated historical cost if purchased or constructed. Donated assets are recorded at estimated fair market value at the date of donation.

The costs of normal maintenance and repairs that do not add to the value of the asset or materially extend asset lives are not capitalized. Major outlays for capital assets and improvements are capitalized as projects are constructed.

Property, plant and equipment of the primary government are depreciated using the straight-line method over the following estimated useful lives: roadways: 25 years; sanitary sewer: 25 years; irrigation: 25 years; water management/mitigation: 25 years.

In the governmental fund financial statements, amounts incurred for the acquisition of capital assets are reported as fund expenditures. Depreciation expense is not reported in the governmental fund financial statements.

Estimates

The preparation of financial statements in conformity with accounting principles generally accepted in the U.S. requires management to make estimates and assumptions that affect certain reported amounts and disclosures. Accordingly, actual results could differ from those estimates.

Long-Term Obligations

In the government-wide financial statements, long-term debt and other long-term obligations are reported as liabilities in the Statement of Net Position. Bond premiums and discounts are deferred and amortized over the life of the bonds using the straight-line or effective interest method. Bonds payable are reported net of these premiums or discounts. Issuance costs, whether or not withheld from the actual debt proceeds received, are reported as current period expenses.

In the fund financial statements, governmental fund types recognize bond premiums and discounts during the current period. The face amount of the debt issued is reported as other financing sources. Premiums received on debt issuances are reported as other financing sources while discounts on debt issuances are reported as other financing uses. Issuance costs, whether or not withheld from the actual debt proceeds received, are reported as debt service expenditures.

NOTE 2: SUMMARY OF SIGNIFICANT ACCOUNTING POLICIES (Continued)

Deferred Outflows/Inflows of Resources

In addition to assets, the Statement of Net Position will sometimes include a separate section for deferred outflows of resources. This separate financial statement element, *deferred outflows of resources,* represents a consumption of net position that applies to a future period(s) and so will not be recognized as an outflow of resources (expense/expenditure) until then. The District does not have any of this type of item at September 30, 2018.

In addition to liabilities, the Statement of Net Position will sometimes report a separate section for deferred inflows of resources. This separate financial statement element, *deferred inflows of resources,* represents an acquisition of net position that applies to a future period(s) and so will not be recognized as an inflow of resources (revenue) until that time. The District does not have any of this type of item at September 30, 2018.

Fund Equity

Net position in the government-wide financial statements represents the difference between assets and deferred outflows of resources and liabilities and deferred inflows of resources and is categorized as net investment in capital assets, restricted or unrestricted. Net investment in capital assets represents assets related to infrastructure and property, plant and equipment, net of any related debt. Restricted net position represents the assets restricted by the District's bond covenants.

Governmental fund equity is classified as fund balance. Fund balance is further classified as nonspendable, restricted, committed, assigned, or unassigned. Nonspendable fund balance cannot be spent because of its form. Restricted fund balance has limitations imposed by creditors, grantors, or contributors or by enabling legislation or constitutional provisions. Committed fund balance is a limitation imposed by the District board through approval of resolutions. Assigned fund balance is a limitation imposed by a designee of the District board. Unassigned fund balance in the General Fund is the net resources in excess of what can be properly classified in one of the above four categories. Negative unassigned fund balance in other governmental funds represents excess expenditures incurred over the amounts restricted, committed, or assigned to those purposes.

Budgets

The District is required to establish a budgetary system and an approved annual budget. Annual budgets are legally adopted on a basis consistent with GAAP for the General Fund. Any revision to the budget must be approved by the District Board. The budgets are compared to actual expenditures. In instances where budget appropriations and estimated revenues have been revised during the year, budget data presented in the financial statements represent final authorization amounts.

NOTE 2: SUMMARY OF SIGNIFICANT ACCOUNTING POLICIES (Continued)

The District follows these procedures in establishing the budgetary data reflected in the financial statements:

A. Each year the District Manager submits to the District Board a proposed operating budget for the fiscal year commencing the following October 1.
B. A public hearing is conducted to obtain comments.
C. Prior to October 1, the budget is legally adopted by the District Board.
D. All budget changes must be approved by the District Board.
E. Budgets are adopted on a basis consistent with accounting principles generally accepted in the United States of America.

NOTE 3: CAPITAL ASSETS

The following is a summary of changes in the capital assets for the year ended September 30, 2018:

	Beginning Balance	Additions	Transfers and Conveyances	Ending Balance
Governmental Activities:				
Capital assets not being depreciated:				
Land	$ 2,668,665	$ -	$ -	$ 2,668,665
Total capital assets, not being depreciated	2,668,665	-	-	2,668,665
Capital assets being depreciated:				
Roadways	2,741,831	-	-	2,741,831
Sanitary sewer	240,878	-	-	240,878
Irrigation	67,134	-	-	67,134
Water management/mitigation	5,215,437	-	-	5,215,437
Total capital assets, being depreciated	8,265,280	-	-	8,265,280
Less accumulated depreciation:				
Roadways	985,881	109,674	-	1,095,555
Sanitary sewer	86,715	9,635	-	96,350
Irrigation	24,110	2,685	-	26,795
Water management/mitigation	1,687,139	208,617	-	1,895,756
Total accumulated depreciation	2,783,845	330,611	-	3,114,456
Total capital assets, being depreciated, net	5,481,435	(330,611)	-	5,150,824
Governmental activities capital assets, net	$ 8,150,100	$ (330,611)	$ -	$ 7,819,489

NOTE 3: CAPITAL ASSETS (Continued)

Depreciation expense of $330,611 was allocated to maintenance and operations on the accompanying Statement of Activities.

NOTE 4: INVESTMENTS

The District's investments consist of money market funds in which shares are owned in the fund rather than the underlying investments. In accordance with GASB 72, Fair Value Measurement and Application, these amounts are reported at amortized cost.

The following is a summary of the District's investments:

September 30,		**2018**	**Credit Risk**	**Weighted Average Maturities**
Short-term Money Market Funds	$	154,129	S&P AAAm	29 days

Concentration risk – The District's investment policy requires diversification, but does not specify limits on types of investments.

Custodial credit risk – For an investment, custodial credit risk is the risk that the District will not be able to recover the value of the investments or collateral securities that are in the possession of an outside party. The District has no formal policy for custodial risk. At September 30, 2018, none of the investments listed above are exposed to custodial credit risk because their existence is not evidenced by securities that exist in physical or book entry form.

Interest rate risk – The District does not have a formal policy for addressing interest rate risk; however, investments are made with discretion, to seek reasonable returns, preserve capital, and in general, avoid speculative investments. The District manages its exposure to declines in fair values from interest rate changes by reviewing the portfolio on an ongoing basis for changes in effective yield amounts.

NOTE 5: BONDS PAYABLE

On May 14, 2004, the District issued $42,940,000 of Capital Improvement Revenue Bonds, Series 2004 consisting of $27,740,000 Term Bonds Series 2004A due on May 1, 2035 with a fixed interest rate of 6.25%, and $15,200,000 Term Bonds Series 2004B due on May 1, 2014 with a fixed interest rate of 5.875%. The Bonds were issued to finance the acquisition and construction of certain improvements for the benefit of the District. Interest is paid semiannually on each May 1 and November 1. Principal on the Series 2004A Bonds is paid serially commencing on May 1, 2006 through May 1, 2035. The Series 2004B Bonds were repaid in full during fiscal year 2008.

NOTE 5: BONDS PAYABLE (Continued)

The 2004A Bonds due in May 2035 may, at the option of the District, be called for redemption as a whole at any time or in part on any interest payment date on or after May 1, 2014 at a redemption price set forth in the Bond Indenture.

The Bond Indenture has certain restrictions and requirements relating principally to the use of proceeds to pay for the infrastructure improvements and the procedure to be followed by the District on assessments to property owners. The District agreed to levy special assessments in annual amounts adequate to provide payment of debt service. As discussed below, the District is not in compliance with certain requirements of the Bond Indenture.

The Bond Indenture requires that the District maintain adequate funds in the reserve account to meet the debt service reserve requirement as defined in the Indenture. The requirement has not been met for the fiscal year ended September 30, 2018. In the absence of available funds, the scheduled debt service payments due since May 1, 2010 have not been paid as of the date of this report. As a result, a debt service obligation totaling approximately $17.9 million has been recorded on the accompanying Balance Sheet – Governmental Funds.

Long-term liability activity for the year ended September 30, 2018, was as follows:

	Beginning Balance	Additions	Reductions	Ending Balance	Due Within One Year
Governmental Activities					
Bonds Payable:					
Series 2004 A	$ 25,360,000	$ -	$ (815,000)	$ 24,545,000	$ 5,505,000
	$ 25,360,000	$ -	$ (815,000)	$ 24,545,000	$ 5,505,000

At September 30, 2018, the scheduled debt service requirements on long-term debt were as follows:

Year Ending September 30,	**Principal**	**Interest**	**Total Debt Service**
2019	$ 5,505,000	$ 14,601,267	$ 20,106,267
2020	765,000	1,190,000	1,955,000
2021	815,000	1,142,188	1,957,188
2022	865,000	1,091,250	1,956,250
2023	920,000	1,037,188	1,957,188
2024-2028	5,580,000	4,244,688	9,824,688
2029-2033	7,620,000	2,261,563	9,881,563
2034-2035	2,475,000	195,000	2,670,000
	$ 24,545,000	$ 25,763,144	$ 50,308,144

NOTE 5: BONDS PAYABLE (Continued)

A Forbearance Agreement was signed in fiscal year 2011, which would forgive the unpaid debt service assessments for the undeveloped land during the forbearance period (Note 9). However, the Previous Developer defaulted on this agreement, thus all of the unpaid debt service assessments are still due to the District. Certain assessments are now being forborne under the terms of the Transition Agreement.

NOTE 6: RISK MANAGEMENT

The District is exposed to various risks of loss related to torts; theft of, damage to, and destruction of assets; errors and omissions; and natural disasters. The District maintains commercial insurance coverage to mitigate the risk of loss. Coverage may not extend to all situations. Management believes such coverage is sufficient to preclude any significant uninsured losses to the District. The District has not filed any claims under this commercial coverage during the last three years.

NOTE 7: MANAGEMENT COMPANY

The District has contracted with a management company to perform management services, which include financial and accounting services. Certain employees of the management company also serve as officers (Board appointed non-voting positions) of the District. Under the agreement, the District compensates the management company for management, accounting, financial reporting, and other administrative costs.

NOTE 8: RELATED PARTY TRANSACTIONS

During the year ended September 30, 2018, the SPE directed the trustee, with the consent of the bondholders, to utilize District debt service trust funds to satisfy the SPE's operations and maintenance assessments obligation totaling $279,413. The SPE also contributed $293,869 to the General Fund to help fund the wetland mitigation project. These amounts are included in General Fund revenues and Debt Service Fund general government expense in the accompanying financial statements. In addition, during the year ended September 30, 2018, the SPE remitted prepayment revenue to the District totaling approximately $812,000, which is reported in the Debt Service Fund.

During the year ended September 30, 2018, the District recorded $36,860 in Maintenance and operations expenses with Magnolia Landing Golf, LLC., a subsidiary of the Previous Developer. At September 30, 2018, $3,495 of these expenses are included in Accrued expenses payable in the accompanying financial statements.

During the year ended September 30, 2018, the District recorded $46,870 in Maintenance and operations expenses with Magnolia Landing Master Association, Inc. ("HOA"), the master homeowners association located in the District.

NOTE 8: RELATED PARTY TRANSACTIONS (Continued)

During the year ended September 30, 2018, the District recorded $120,275 in General government expense with Lerner Real Estate Advisors, the company that operates and manages the SPE. Four members of the District's Board of Supervisors are employed by this company.

NOTE 9: CONCENTRATION

A significant portion of the District's activity is dependent upon the continued involvement of the SPE, the loss of which could have a material adverse effect on the District's operations. At September 30, 2018, the SPE owned a significant portion of the assessable property located within the District boundaries, 842 unplatted lots. In November 2017, the SPE sold 238 unplatted lots to D.R. Horton.

On February 24, 2011, the District entered into a forbearance agreement with the Previous Developer, the bond trustee and the SPE. The SPE was formed for the purpose of taking ownership of additional land that would be brought into the District upon completion of the boundary amendment in accordance with the agreement. Pursuant to paragraph 8 of the agreement, the District on September 16, 2011 filed a boundary amendment petition with Lee County to incorporate the additional lands into the District. The petition was granted during fiscal year 2012.

The agreement also outlined the monetary obligations of the Previous Developer. According to the agreement, the District agreed not to commence collection or enforcement on the unpaid debt service assessments for the duration of the forbearance period (April 30, 2012) as long as the Previous Developer complied with the agreement. During fiscal year 2012, the Previous Developer defaulted on the 2011 forbearance agreement.

On April 18, 2013, the District, the bond trustee, the SPE, and the Previous Developer entered into a Project Transfer and Transition Agreement ("Transition Agreement") whereby, among other things, the Previous Developer conveyed its interest in certain lots to D.R. Horton, Inc. ("D.R. Horton"), conveyed its other developable property within the District to the SPE, and made certain payments to the District. As a result of the Transition Agreement, the Previous Developer was released from a portion of its obligations to the District, and a portion of O&M assessment amounts, as well as other amounts. Certain debt service assessments remain delinquent and have been forborne under the Transition Agreement. Subsequent to the execution of the Transition Agreement and the transfer of said developable property, the SPE has been acting as the developer for the project. The SPE was created at the direction of the Trustee, for the benefit of the bondholders.

In August 2017, in conjunction with a purchase contract between D.R. Horton and the SPE to purchase the undeveloped land from the SPE, the District, the bond trustee, and D.R. Horton entered into a forbearance agreement. According to the agreement, the District agreed not to commence collection or enforcement on the debt service assessments related to the undeveloped property previously held by the SPE, for the duration of the forbearance period, commencing

NOTE 9: CONCENTRATION (Continued)

October 1, 2017 and ending October 1, 2019, as long as D.R. Horton complied with the agreement. Pursuant to section 3.(a) of the agreement, D.R. Horton shall pay the District a Termination Payment of $707,812 by the end of the forbearance period, which will satisfy the obligation for the forborne debts service assessments accrued during the forbearance period. This amount will be adjusted for any sales of the forbearance property during the forbearance period. In November 2017, D.R. Horton purchased 238 unplatted lots from the SPE.

NOTE 10: ESCROW AGREEMENT

During fiscal year 2013, the District entered into an escrow agreement with Lee County, Florida to ensure the completion of a paving project. The District paid the initial escrow amount of $93,643 in July 2013. The agreement requires the District to increase the escrow by 10% each year, compounded annually, that the project is not completed. Upon issuance of a certificate of completion by the County, the escrow funds will be returned to the District. If the District fails to complete the improvements according to the agreement, the escrow funds will be released to the County. The escrow balance was not recorded in the District's financial statements. The District did not make the fiscal year 2017 and 2018 escrow payments. On January 17, 2018, the total escrow funds of $124,639 were distributed to D.R. Horton, as they assumed the responsibility to complete the paving project.

NOTE 11: COMMITMENT

At September 30, 2018, the District had $120,002 remaining on a contract related to phase two and three of the wetland mitigation project. The original contract was for $357,757. Phase two of the project was completed at a total cost of $237,755 during fiscal year 2018. The project was completed in January 2019.

NOTE 12: OTHER MATTERS

The District has a potential claim against the SPE and D.R. Horton in the amount of $35,312 to reimburse the District for roadway repairs made by the District for which D.R. Horton was responsible. The ultimate outcome is unknown at this time.

In addition, there is a threatened enforcement action against the District by the water management district related to conservation easements and/or wetland mitigation. In order to address the findings of the water management district, in February 2019, the District entered into a contract for conservation maintenance services totaling $146,803 per year, for one year, with the option for two additional one-year terms.

Required Supplemental Information
(Other Than MD&A)

CFM Community Development District
Budget to Actual Comparison Schedule – General Fund

Year ended September 30,			2018	
	Original Budget	Final Budget	Actual Amounts	Variance with Final Budget
Revenues				
Assessments	$ 366,398	$ 366,398	$ 367,236	$ 838
SPE contributions	-	293,869	293,869	-
Interest	-	-	157	157
Total revenues	366,398	660,267	661,262	995
Expenditures				
General government	135,698	135,698	153,412	(17,714)
Maintenance and operations	230,700	524,569	438,824	85,745
Total expenditures	366,398	660,267	592,236	68,031
Excess of revenues over expenditures	$ -	$ -	$ 69,026	$ 69,026

CRI CARR RIGGS & INGRAM
CPAs and Advisors

Carr, Riggs & Ingram, LLC
Certified Public Accountants
500 Grand Boulevard
Suite 210
Miramar Beach, Florida 32550

(850) 837-3141
(850) 654-4619 (fax)
CRIcpa.com

INDEPENDENT AUDITORS' REPORT ON INTERNAL CONTROL OVER FINANCIAL REPORTING AND ON COMPLIANCE AND OTHER MATTERS BASED ON AN AUDIT OF FINANCIAL STATEMENTS PERFORMED IN ACCORDANCE WITH *GOVERNMENT AUDITING STANDARDS*

To the Board of Supervisors
CFM Community Development District
Lee County, Florida

We have audited, in accordance with the auditing standards generally accepted in the United States of America and the standards applicable to financial audits contained in *Government Auditing Standards* issued by the Comptroller General of the United States, the financial statements of the governmental activities and each major fund of CFM Community Development District (hereinafter referred to as the "District"), as of and for the year ended September 30, 2018, and the related notes to the financial statements, which collectively comprise the District's basic financial statements, and have issued our report thereon dated March 27, 2019.

Internal Control Over Financial Reporting

In planning and performing our audit of the financial statements, we considered the District's internal control over financial reporting (internal control) to determine the audit procedures that are appropriate in the circumstances for the purpose of expressing our opinions on the financial statements, but not for the purpose of expressing an opinion on the effectiveness of the District's internal control. Accordingly, we do not express an opinion on the effectiveness of the District's internal control.

A *deficiency in internal control* exists when the design or operation of a control does not allow management or employees, in the normal course of performing their assigned functions, to prevent, or detect and correct, misstatements on a timely basis. A *material weakness* is a deficiency, or a combination of deficiencies, in internal control, such that there is a reasonable possibility that a material misstatement of the entity's financial statements will not be prevented, or detected and corrected on a timely basis. A *significant deficiency* is a deficiency, or a combination of deficiencies, in internal control that is less severe than a material weakness, yet important enough to merit attention by those charged with governance.

Our consideration of internal control was for the limited purpose described in the first paragraph of this section and was not designed to identify all deficiencies in internal control that might be material weaknesses or significant deficiencies. Given these limitations, during our audit we did not identify any deficiencies in internal control that we consider to be material weaknesses. However, material weaknesses may exist that have not been identified.

Compliance and Other Matters

As part of obtaining reasonable assurance about whether the District's financial statements are free from material misstatement, we performed tests of its compliance with certain provisions of laws regulations, contracts, and grant agreements, noncompliance with which could have a direct and material effect on the determination of financial statement amounts. However, providing an opinion on compliance with those

provisions was not an objective of our audit, and accordingly, we do not express such an opinion. The results of our tests disclosed an instance of noncompliance or other matters that is required to be reported under *Government Auditing Standards*, and which is described below:

- IC2010-1: At September 30, 2018, the District was not in compliance with certain provisions of its Debt Service Bond indenture including those relating to 1) collecting amounts to provide payment of debt service, 2) maintaining adequate funds in debt service reserve accounts, and 3) making its semi-annual debt service principal and interest payments.

The District's response to the finding identified in our audit is described below. We did not audit the District's response and, accordingly, we express no opinion on it.

- *The District and the bondholders have been working to alleviate this issue. During a prior year the Trustee and Bondholders formed the SPE to take ownership of the undeveloped land subject to delinquent assessments. During a prior year the District, Trustee, and SPE entered into a Project Transfer and Transition Agreement whereby, among other things, Windham/Magnolia Landing, LLC conveyed its interest in certain lots to D.R. Horton, Inc., conveyed its other developable property within the District to the SPE, and made certain payments to the District. As a result of Transfer and Transition Agreement, Windham was released from a portion of its obligations to the District, and a portion of O&M assessment amounts, as well as other amounts. Certain debt service assessments remain delinquent and have been forborne under the Agreement. Once the delinquent debt service assessments are collected they will be used to pay past due debt service assessments. At this time it is uncertain if the debt service reserve will be replenished. However, the District intends to continue to work with the Trustee and bondholders to revitalize the project. During fiscal year 2018, the SPE sold an additional 238 lots to D. R. Horton Inc. and has assumed ongoing debt assessments for these lots, after a two year forbearance period. Furthermore, the SPE has completed the first of several improvements of Phase 2 lot development enhancing the future marketability of unsold property in the district.*

Purpose of this Report

The purpose of this report is solely to describe the scope of our testing of internal control and compliance and the results of that testing, and not to provide an opinion on the effectiveness of the District's internal control or on compliance. This report is an integral part of an audit performed in accordance with *Government Auditing Standards* in considering the District's internal control and compliance. Accordingly, this communication is not suitable for any other purpose.

Carr, Riggs & Ingram, L.L.C.

Miramar Beach, Florida
March 27, 2019

CRI CARR RIGGS & INGRAM
CPAs and Advisors

Carr, Riggs & Ingram, LLC
Certified Public Accountants
500 Grand Boulevard
Suite 210
Miramar Beach, Florida 32550

(850) 837-3141
(850) 654-4619 (fax)
CRIcpa.com

MANAGEMENT LETTER

To the Board of Supervisors
CFM Community Development District
Lee County, Florida

Report on the Financial Statements

We have audited the financial statements of CFM Community Development District ("District") as of and for the fiscal year ended September 30, 2018, and have issued our report thereon dated March 27, 2019.

Auditors' Responsibility

We conducted our audit in accordance with auditing standards generally accepted in the United States of America; the standards applicable to financial audits contained in *Government Auditing Standards,* issued by the Comptroller General of the United States; and Chapter 10.550, Rules of the Florida Auditor General.

Other Reporting Requirements

We have issued our Independent Auditor's Report on Internal Control over Financial Reporting and on Compliance and Other Matters Based on an Audit of the Financial Statements Performed in Accordance with *Government Auditing Standards* and Independent Accountant's Report on an examination conducted in accordance with *AICPA Professional Standards*, AT-C Section 315, regarding compliance requirements in accordance with Chapter 10.550, Rules of the Auditor General. Disclosures in these reports, which are dated March 27, 2019, should be considered in conjunction with this management letter.

Prior Audit Findings

Section 10.554(1)(i)1., Rules of the Auditor General, requires that we determine whether or not actions have been taken to address findings and recommendations made in the preceding annual financial audit report. Recommendation IC2010-01 was made in the preceding and second preceding financial audit report and is addressed on page 27. Actions have been taken to address the finding, which was also included in the preceding and second preceding fiscal year audit report. These actions are described in the District's response to the finding, also on page 27.

Official Title and Legal Authority

Section 10.554(1)(i)4., Rules of the Auditor General, requires that the name or official title and legal authority for the primary government and each component unit of the reporting entity be disclosed in this management letter, unless disclosed in the notes to the financial statements. The information required is disclosed in the notes to the financial statements.

Financial Condition and Management

Sections 10.554(1)(i)5.a. and 10.556(7), Rules of the Auditor General, require us to apply appropriate procedures and communicate the results of our determination as to whether or not the local governmental entity has met one or more of the conditions described in Section 218.503(1), Florida Statutes, and identification of the specific condition(s) met. In connection with our audit, we determined that the District met the condition described in Section 218.503(1)(a), Florida Statutes. In the absence of available funds, the scheduled debt service payments due May 1, 2010 through the date of this report were not made. The financial emergency condition met was a result of deteriorating financial conditions. Such deteriorating financial conditions are further discussed below. The District's response to these findings is presented on page 27.

Pursuant to Sections 10.554(1)(i)5.b. and 10.556(8), Rules of the Auditor General, we applied financial condition assessment procedures and as a result, it was determined that a deteriorating financial condition exists with respect to the District. The District is owed approximately $6.5 million in debt service assessments. The District has not made the scheduled debt service payments since May 1, 2010 through the date of this report. It is management's responsibility to monitor the District's financial condition, and our financial condition assessment was based in part on representations made by management and the review of financial information provided by same.

Section 10.554(1)(i)2., Rules of the Auditor General, requires that we communicate any recommendations to improve financial management. In connection with our audit, we did not have any such recommendations.

Additional Matters

Section 10.554(1)(i)3., Rules of the Auditor General, requires us to communicate noncompliance with provisions of contracts or grant agreements, or abuse, that have occurred, or are likely to have occurred, that have an effect on the financial statements that is less than material but which warrants the attention of those charged with governance. In connection with our audit, we did not have any such findings.

Purpose of this Letter

Our management letter is intended solely for the information and use of the Legislative Auditing Committee, members of the Florida Senate and the Florida House of Representatives, the Florida Auditor General, Federal and other granting agencies, and applicable management, and is not intended to be and should not be used by anyone other than these specified parties.

Carr, Riggs & Ingram, L.L.C.

Miramar Beach, Florida
March 27, 2019

CRI CARR RIGGS & INGRAM
CPAs and Advisors

Carr, Riggs & Ingram, LLC
Certified Public Accountants
500 Grand Boulevard
Suite 210
Miramar Beach, Florida 32550

(850) 837-3141
(850) 654-4619 (fax)
CRIcpa.com

INDEPENDENT ACCOUNTANT'S REPORT

To the Board of Supervisors
CFM Community Development District
Lee County, Florida

We have examined CFM Community Development District's compliance with the requirements of Section 218.415, Florida Statutes, *Local Government Investment Policies*, during the year ended September 30, 2018. Management is responsible for the District's compliance with those requirements. Our responsibility is to express an opinion on the District's compliance based on our examination.

Our examination was conducted in accordance with attestation standards established by the American Institute of Certified Public Accountants. Those standards require that we plan and perform the examination to obtain reasonable assurance about whether the District complied, in all material respects, with the specified requirements referenced above. An examination involves performing procedures to obtain evidence about whether the District complied with the specified requirements. The nature, timing, and extent of the procedures selected depend on our judgment, including an assessment of the risks of material noncompliance, whether due to fraud or error. We believe that the evidence we obtained is sufficient and appropriate to provide a reasonable basis for our opinion.

Our examination does not provide a legal determination on the District's compliance with specified requirements.

In our opinion, the District complied, in all material respects, with the aforementioned requirements for the year ended September 30, 2018.

This report is intended solely for the information and use of management and the State of Florida Auditor General and is not intended to be and should not be used by anyone other than these specified parties.

Carr, Riggs & Ingram, L.L.C

Miramar Beach, Florida
March 27, 2019

Tab 6

Hopping Green & Sams

Attorneys and Counselors

March 28, 2019

Lucaya Community Development District
c/o Belinda Blandon, District Manager
Rizzetta & Company
9428 Camden Field Parkway
Riverview, Florida 33578

Re: Lucaya Community Development District

Dear Belinda:

The fee agreement in place between our firm and the District contemplates adjustments to the hourly rates from time to time after an annual evaluation by our firm. The firm has not increased rates for the District since 2017 and is respectfully submitting this notification well in advance of the budget planning process. For Fiscal Year 2019/2020, our firm is proposing to increase our standard hourly rates. My hourly rate is proposed to adjust from $310 to $335, which is an increase of $25 per hour. Tucker Mackie will be another shareholder providing services to this District and her hourly rate will be $300. The hourly rate for associates most likely to provide services to the District is proposed to range from $235 to $270. The rate for paralegal services will remain the same at $135. The new hourly rates are proposed to take effect on October 1, 2019.

As always, we will continue to implement cost-effective strategies to minimize legal expenses for the District while at the same time providing thoughtful and comprehensive services.

If you have any questions, please feel free to call. We thank you for the opportunity to be of service.

Sincerely,

Michael C. Eckert

MCE/lk

cc: David Westbrook, Chairman

Post Office Box 6526 Tallahassee, Florida 32314 119 S. Monroe Street, Suite 300 (32301) 850.222.7500 850.224.8551 fax www.hgslaw.com